ENG

VIDEOKIT
ESVK/6788 SERIES
“2 Wire” bus one way, two way videokit

ESVK Rev.0.2
ESVKX Rev.0.2
ESVKC Rev.0.3

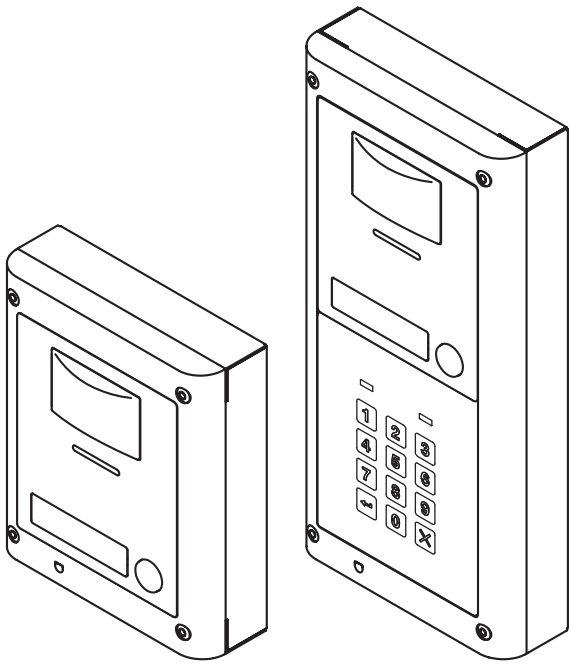

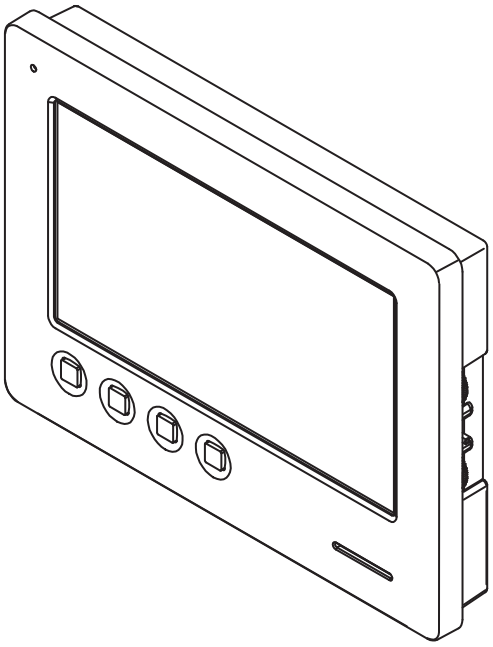

6788

Installation handbook

66550029-EN - V7.3 - 28/02/25

We recommend
This equipment is installed by a Competent Electrician, Security or Communications Engineer.

Index

System components and available versions 3
General directions for installation 6
Art. 4384/4384X Speaker unit with built-in camera & proximity key reader 10
Art. 4901 Digital codelock module 17
4000 Series surface and flush mounting door station installation 20
Art. 6788 7" hands free colour display digital videophone 22
6700 Series Videophone wall mounting instructions 26
Art. 2321-2321/P Power supplies 27
Art. 2322 Power supply converter from BUS line to 12 Vdc 29
Art. 4042 .. 4045 Single row button expansion modules 30
Art. 4042D .. 4045D Double row button expansion modules 30
Installation diagrams 33

NOTES AND SUGGESTIONS

- All diagrams refer to all kits versions: flush or surface, colour or black & white.
- Dashed connections refer to optional connections ("Local bell", "Push to exit" & "Door monitor").
- Some diagrams show how to connect a 12Vdc electric lock: these directions are suitable for all diagrams in this manual.
- Each time a setting is changed on a videophone (address, extension, number of rings etc.), the videophone must be disconnected from the relevant connection board then after a few seconds reconnected again to allow the recognizing of the new setting.
- All diagrams shown are valid for B&W or colour systems with surface or flush mount door station.

ADDRESSES 1..12 TABLE FOR DIP-SWITCH BANKS WITH ON POSITION UP

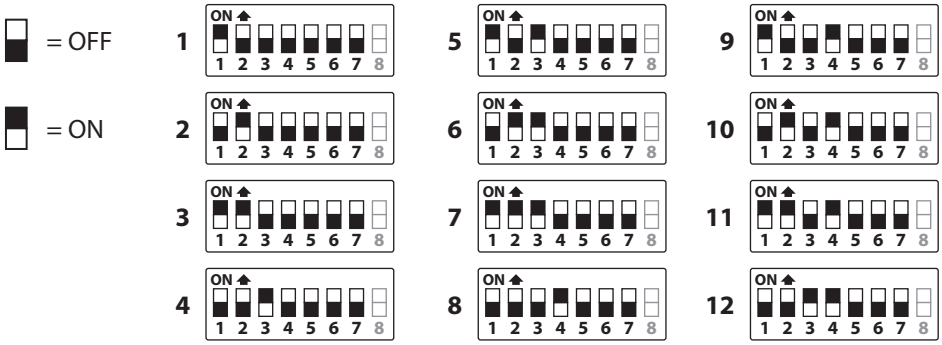

DECLARATION OF RESPONSIBILITY

This manual has been written and revised carefully. The instructions and the descriptions which are included in it are referring to VIDEX parts and are correct at the time of print. However, subsequent VIDEX parts and manuals, can be subject to changes without notice. VIDEX Electronics S.p.A. cannot be held responsible for damages caused directly or indirectly by errors, omissions or discrepancies between the VIDEX parts and the Manual.

⚠ **WE RECOMMEND**
This equipment is installed by a Competent Electrician, Security on Communications Engineer

System components and available versions

ESVK/6788 Colour videokit.

OUTDOOR STATION

Camera unit
Art. 4384
pag. 10

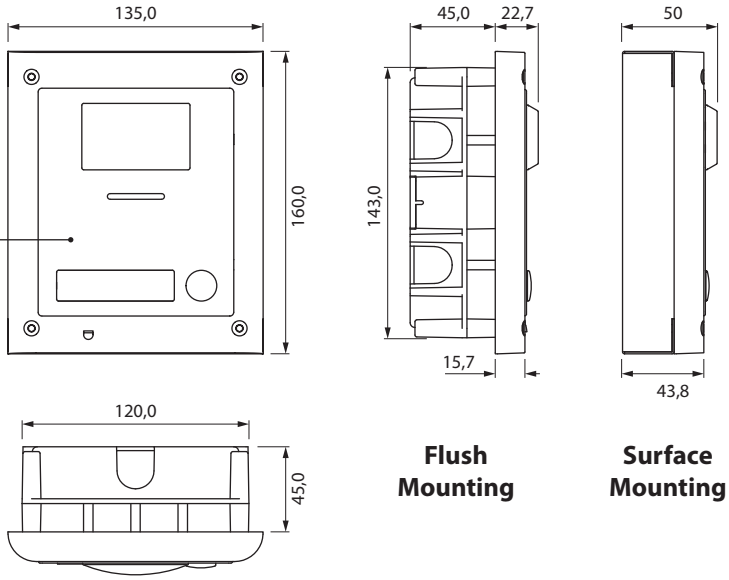

INDOOR STATION
Videophone
Art. 6788
pag. 22

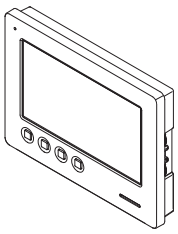

ACCESSORIES
Power supply
Art. 2321
pag. 27

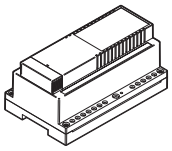

Fig. 1 - ESVK/6788 components (measures in mm)

ONE WAY VERSIONS	**ESVK-1/6788 - flush mounting**		
	1 Outdoor station composed of: 1 Art. 4384-1: 1 button camera unit 1 Art. 4851: Flush mounting box	**1 Colour videophone** Art. 6788	**1 Power supply** Art. 2321
	ESVK-1S/6788 - surface mounting		
	1 Outdoor station composed of: 1 Art. 4384-1: 1 button camera unit 1 Art. 4881: Surface mounting box	**1 Colour videophone** Art. 6788	**1 Power supply** Art. 2321
TWO WAY VERSIONS	**ESVK-2/6788 - flush mounting**		
	1 Outdoor station composed of: 1 Art. 4384-2: 2 buttons camera unit 1 Art. 4851: Flush mounting box	**2 Colour videophones** Art. 6788	**1 Power supply** Art. 2321
	ESVK-2S/6788 - surface mounting		
	1 Outdoor station composed of: 1 Art. 4384-2: 2 buttons camera unit 1 Art. 4881: Surface mounting box	**2 Colour videophones** Art. 6788	**1 Power supply** Art. 2321

ESVKX/6788 Colour videokit with embended proximity key reader.

OUTDOOR STATION

Camera unit
Art. 4384X
pag. 10

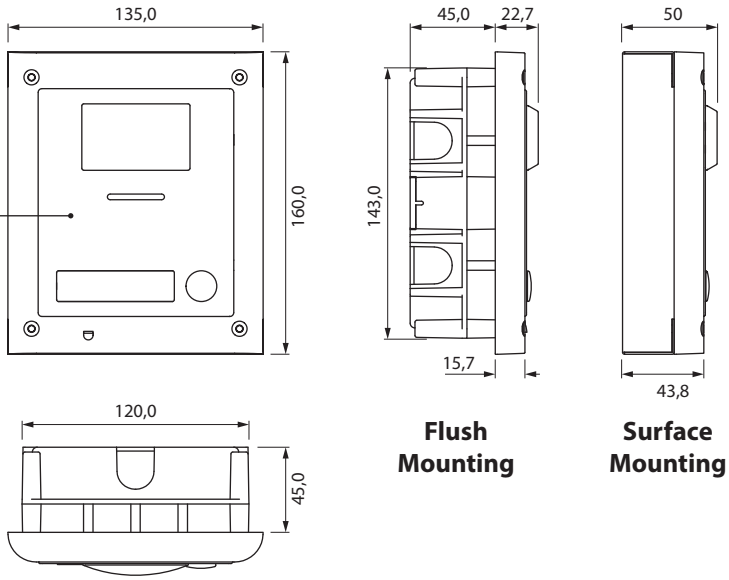

INDOOR STATION
Videophone
Art. 6788
pag. 22

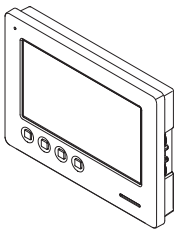

ACCESSORIES

Power supply
Art. 2321
pag. 27

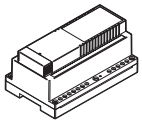

Card format fob
Art. 955/C

Tag format fob
Art. 955/T

Fig. 2 - ESVKX/6788 components (measures in mm)

ONE WAY VERSIONS	**ESVKX-1/6788 - flush mounting**		
	1 Outdoor station composed of: 1 Art. 4384X-1: 1 button camera unit 1 Art. 4851: Flush mounting box	**1 Colour videophone** Art. 6788	**1 Power supply** Art. 2321 **1 Card format fob** Art. 955/C **2 Tag format fobs** Art. 955/T
	ESVKX-1S/6788 - surface mounting		
	1 Outdoor station composed of: 1 Art. 4384X-1: 1 button camera unit 1 Art. 4881: Surface mounting box	**1 Colour videophone** Art. 6788	**1 Power supply** Art. 2321 **1 Card format fob** Art. 955/C **2 Tag format fobs** Art. 955/T
TWO WAY VERSIONS	**ESVKX-2/6788 - flush mounting**		
	1 Outdoor station composed of: 1 Art. 4384X-2: 2 buttons camera unit 1 Art. 4851: Flush mounting box	**2 Colour videophones** Art. 6788	**1 Power supply** Art. 2321 **1 Card format fob** Art. 955/C **4 Tag format fobs** Art. 955/T
	ESVKX-2S/6788 - surface mounting		
	1 Outdoor station composed of: 1 Art. 4384X-2: 2 buttons camera unit 1 Art. 4881: Surface mounting box	**2 Colour videophones** Art. 6788	**1 Power supply** Art. 2321 **1 Card format fob** Art. 955/C **4 Tag format fobs** Art. 955/T

ESVKC/6788 Colour videokit plus a codelock module.

OUTDOOR STATION

Camera unit
Art. 4384
pag. 10

Codelock unit
Art. 4901
pag. 17

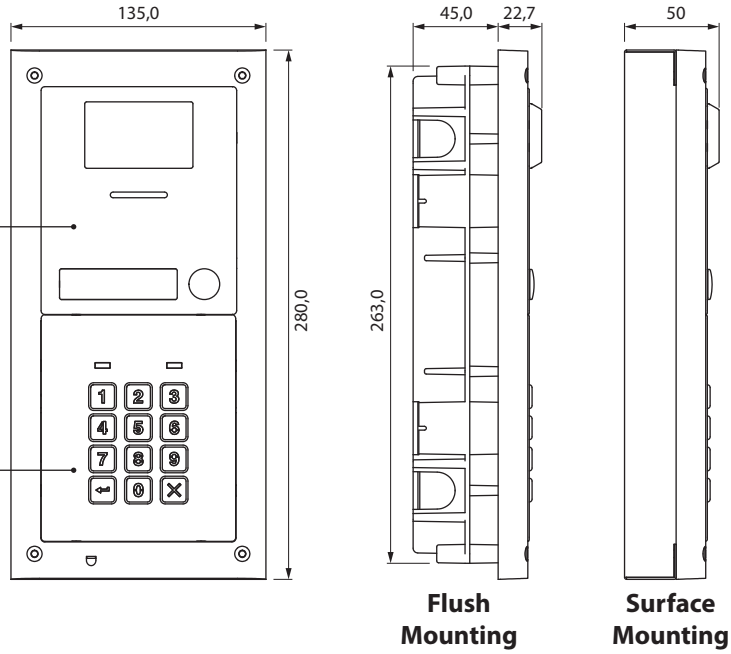

INDOOR STATION
Videophone
Art. 6788
pag. 22

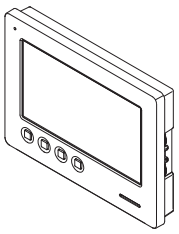

ACCESSORIES

Power supply
Art. 2321
pag. 27

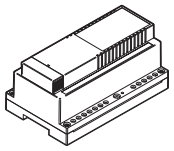

Power supply converter
Art. 2322
pag. 29

Fig. 3 - ESVKC/6788 components (measures in mm)

ONE WAY VERSIONS	**ESVKC-1/6788 - flush mounting**		
	1 Outdoor station composed of: 1 Art. 4384-1: 1 button camera unit 1 Art. 4901: Codelock module 1 Art. 4852: Flush mounting box	**1 Colour videophone** Art. 6788	**1 Power supply** Art. 2321 **1 Power supply converter** Art. 2322
	ESVKC-1S/6788 - surface mounting		
	1 Outdoor station composed of: 1 Art. 4384-1: 1 button camera unit 1 Art. 4901: Codelock module 1 Art. 4882: Surface mounting box	**1 Colour videophone** Art. 6788	**1 Power supply** Art. 2321 **1 Power supply converter** Art. 2322
TWO WAY VERSIONS	**ESVKC-2/6788 - flush mounting**		
	1 Outdoor station composed of: 1 Art. 4384-2: 2 buttons camera unit 1 Art. 4901: Codelock module 1 Art. 4852: Flush mounting box	**2 Colour videophones** Art. 6788	**1 Power supply** Art. 2321 **1 Power supply converter** Art. 2322
	ESVKC-2S/6788 - surface mounting		
	1 Outdoor station composed of: 1 Art. 4384-2: 2 buttons camera unit 1 Art. 4901: Codelock module 1 Art. 4882: Surface mounting box	**2 Colour videophones** Art. 6788	**1 Power supply** Art. 2321 **1 Power supply converter** Art. 2322

General directions for installation

CABLE TYPES AND CROSS SECTIONAL AREAS

The ESVK two wire videokits with 7" monitors can use several types of cables but depending on their specification will allow different distances up to 250 meters maximum. We do not recommend the use of shielded cables because of the high eddy capacitance. It is also not advised to double up on cables as this will also increase the capacitance. The following table specifies values of resistance, capacitance and maximum distances achievable for several types of cables (capacitance and resistance values are referring to 100 metres of cable).

Cable Type*	Wires Section (mm2)	Resistance (Ohm) per 100 metres	Capacitance (nF) per 100 metres	**Maximum Distance between outdoor unit and the farthest indoor unit (metres)	***Maximum Distance between power supply and the farthest indoor unit
VIDEX CM2	0.50	3.2	8	250	100
CAT5 UTP/CW1308	0.22	8	4.9	100	50
Std Telephone Cable	0.28	6.5	5.5	150	50
Standard wire	0.5	2	6.5	70	30

* **It is important that the video intercom system cables do not run with mains or other high power cables. Noise from such cables (electromagnetic interference) may cause noises on audio/video and lost functionality. In cases where this advice can not be followed or when existing cables are to be used it will be necessary to carry out tests to assess the quality and functionality of the installation.**

** **This distance represents the maximum cable length from the outdoor unit to the farthest indoor unit. There are two important characteristics to consider when calculating cable, the resistance and the capacitance. The resistance of the cable from power supply to end point must be less than 10 Ohms and can be calculated from point to point. The capacitance of the cable must not exceed 40nF and is an accumulation of all lengths and branches of the cable. For example: because of cable capacitance, the Videx CM2 cable used in a single system cannot exceed the 400m considering all lengths and branches of the cable.**

*** **This distance represents the maximum total cable length from the power supply unit to the farthest indoor unit. With more than one indoor unit, each sum of the cable segment from the outdoor unit to the power supply unit plus the cable segment from the power supply unit to each videophone, cannot exceed the maximum mentioned in the fourth column of the table above.**

In case of use of cables not in conformity with above specification it is possible to experience deterioration of digital and video signals. We suggest to use twisted cables with maximum resistance of 10 Ohm (between the furthest door station and the furthest videophone) and maximum capacitance of 40nF (this value must be calculated considering all the cables used in the system; the capacitance/metres value is normally specified on the cable package or directly on the cable).

BUS DEVICE SETUP AND VIDEO DISTRIBUTION

- When changing dip switch settings, disconnect the device from the bus for a minimum of 1 minute to allow the unit to fully discharge.
- When you have more than one device in the same apartment, all the devices must be connected to the same video distributor (Art. 317N): this means that you cannot use two video distributors Art. 318 for one apartment where you have 4 videophones/intercoms.
- After completing the installation proceed to testing. The video level gain can be adjusted at several points including distributors, entrance exchanger and bus boosters.

HOW TO CONNECT A LOCAL POWER SUPPLY

The drawing below shows how to connect a local power supply when required (i.e. when you have 4 videophones with the same address that must be switched on at the same time). In both cases switch 4 of SW3 must be set to the ON position.

⚠ NOTE! OBSERVE CONNECTION POLARITIES AS SHOWN IN THE DIAGRAM BELOW.

CABLES LENGTH & SIZE

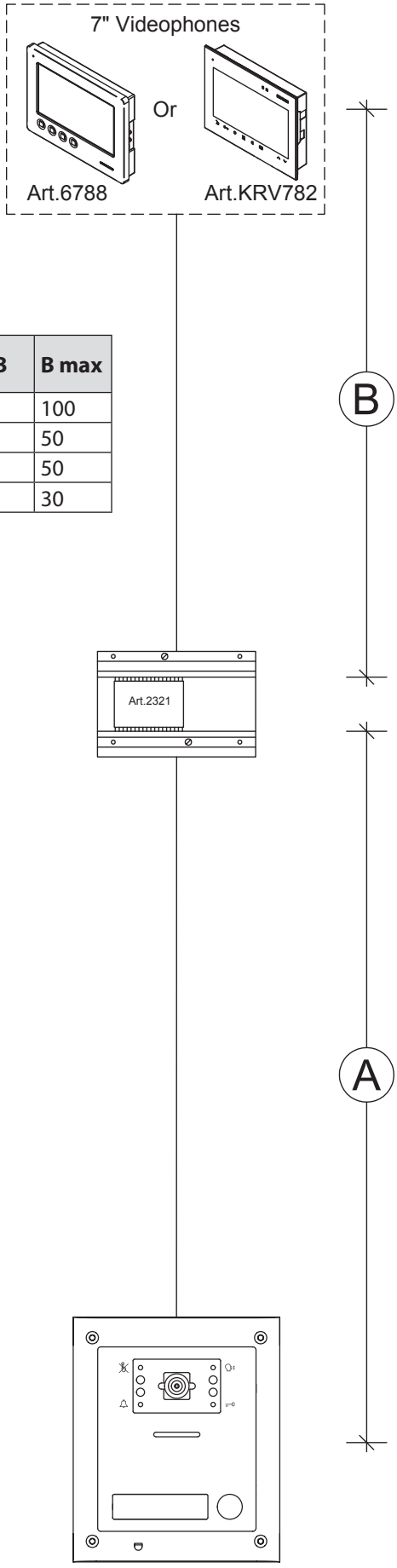

Cable Type	Wires Section (mm2)	A+B	B max
VIDEX CM2	0.50	250	100
CAT5 UTP/CW1308	0.22	100	50
Std Telephone Cable	0.28	150	50
Standard wire	0.5	70	30

General directions for installation

CABLES LENGTH & SIZE

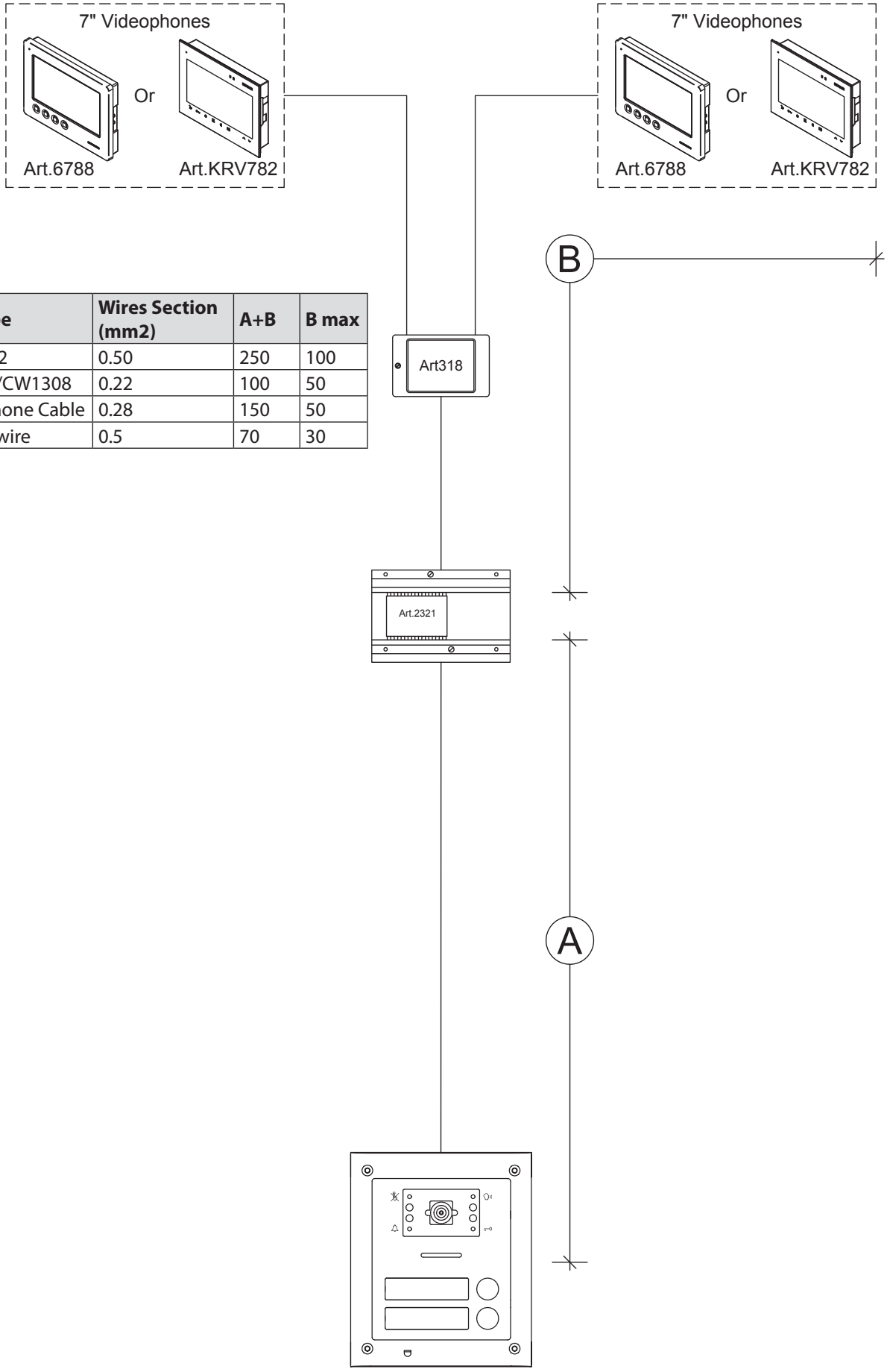

Cable Type	Wires Section (mm2)	A+B	B max
VIDEX CM2	0.50	250	100
CAT5 UTP/CW1308	0.22	100	50
Std Telephone Cable	0.28	150	50
Standard wire	0.5	70	30

General directions for installation

CABLES LENGTH & SIZE

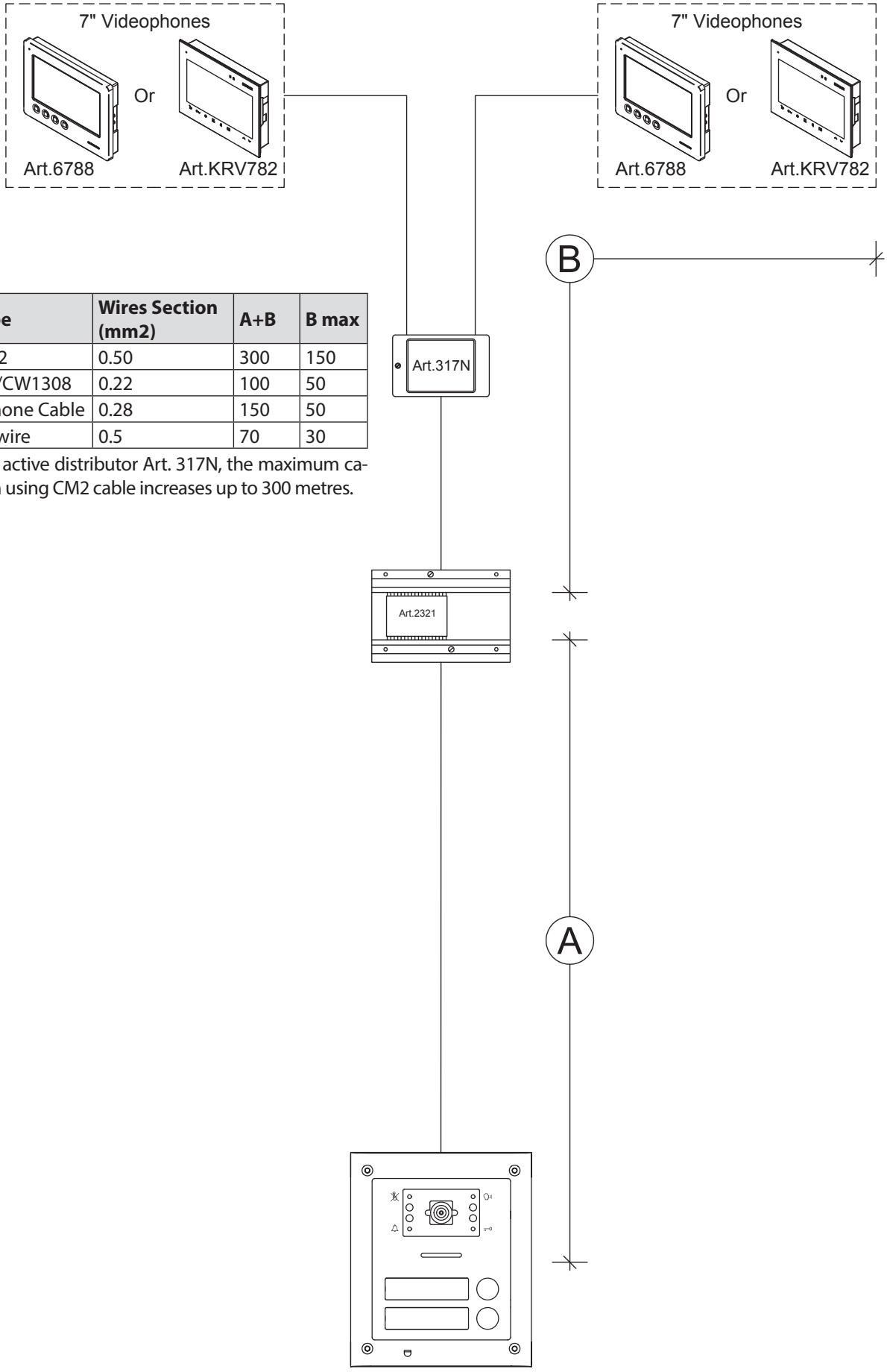

Cable Type	Wires Section (mm2)	A+B	B max
VIDEX CM2	0.50	300	150
CAT5 UTP/CW1308	0.22	100	50
Std Telephone Cable	0.28	150	50
Standard wire	0.5	70	30

* Using the active distributor Art. 317N, the maximum cable length using CM2 cable increases up to 300 metres.

Art. 4384 Speaker unit with built-in camera

Art. 4384X Speaker unit with built-in camera & proximity key reader

PCB Rev.0.1

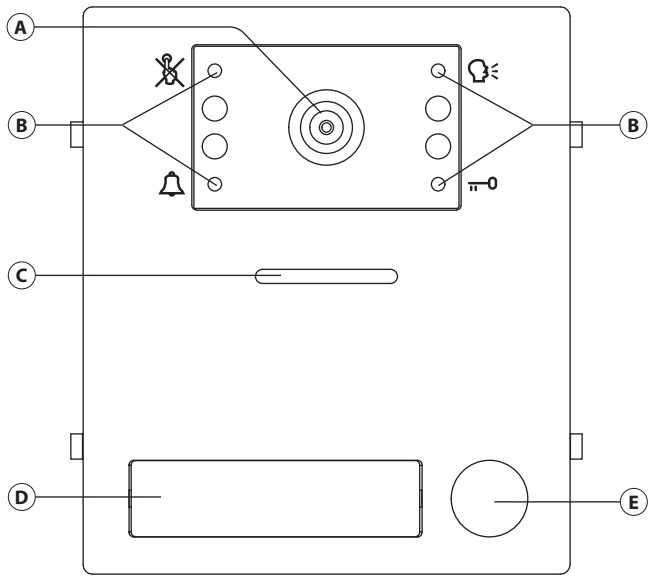

Fig. 1 Front

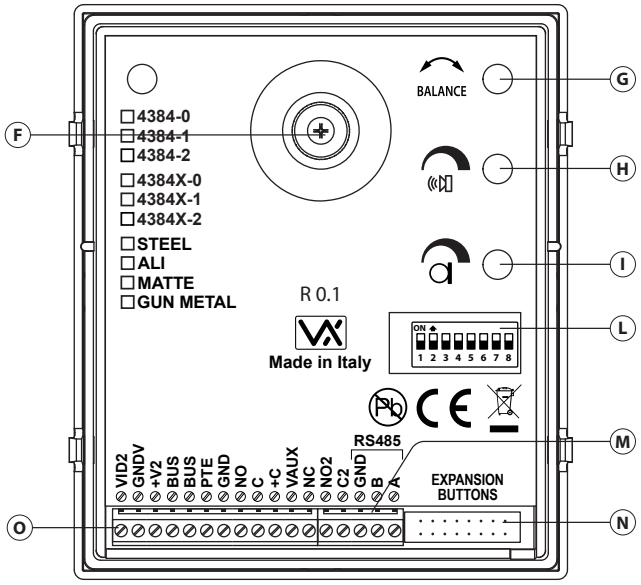

Fig. 2 Back

DESCRIPTION

Speaker unit module for VX2300 digital system with built-in colour camera with autoiris lens and white light illumination LEDs. Art. 4384X versions are also equiped with a built-in proximity key reader and programming modes.

The unit circuitry incorporates:

- The transmitting amplifier with microphone and volume control
- The receiving amplifier with volume control
- The audio balance circuit with "BALANCE" control
- The enslavement relay to enable the electric lock (3 contacts: common, normally open and normally closed). It can work also as capacitor discharge to supply directly the electric lock
- The call buttons from (0, 1 or 2 depending on the module version
- The illumination LEDs for the card name holder
- The camera comprised of illumination LEDs
- The 2nd output with common and normally open contancts for service use.

LEGEND

- (A) Camera with illumination LEDs
- (B) Operation LEDs
- (C) Loudspeaker
- (D) Card name holder with built in-in proximity key reader (only Art. 4384X versions)
- (E) Call push button
- (F) Camera horizontal and vertical adjustment (not available in Wide Angle versions)
- (G) Balance
- (H) Loudspeaker volume
- (I) Microphone volume
- (L) 8 way dip-switch
- (M) RS485 connection terminals (only Art. 4384X versions)
- (N) IDC male connectors
- (O) Connection terminals

AVAILABLE VERSIONS

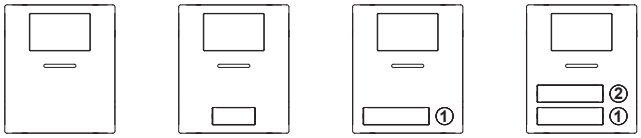

Art. 4384-0 **Art. 4384X-0** **Art. 4384-1 Art. 4384X-1** **Art. 4384-2 Art. 4384X-2**

LEDS

The first LED (red), if switched ON, indicates that it is not possible to make a call because a call or a conversation is in progress (from the outdoor station from which you are calling or from another outdoor station on systems with multiple entrances).

The second LED (red), if switched ON, indicates that a call is in progress. The LED will be switched OFF when the call is answered.

The third LED (yellow), if switched ON, indicates that it is possible to speak. The LED will be switched OFF at the end of conversation (or at the end of the conversation time).

The fourth LED (green), if switched ON, means that the door lock has been operated. It will be switched OFF at the end of the "door opening" time.

CONTROLS

Balance
Prevent Larsen effect on bidirectional audio conversation.

Loudspeaker volume
Adjust the loudspeaker volume.
Rotate clockwise to increase or anti-clockwise to decrease

Microphone volume
Adjust the microphone volume.
Rotate clockwise to increase or anti-clockwise to decrease

PROGRAMMING

The programming consists of the following settings:

- Unit ID (1..15)
- Door opening time (2 or 6 seconds)
- Conversation time (1 or 2 minutes)
- Addressing order of the buttons
- Main camera selection for Art. 4384 versions or programming mode for Art. 4384X versions.

The settings are carried out through the 8 way dip-switch (reference (L) on **Fig. 2**) accessible from the rear side of the module.

PROGRAMMING THE UNIT ID

Switch	Nr.1	Nr.2	Nr.3	Nr.4	ID
ON 1 2 3 4 5 6 7 8	OFF	OFF	OFF	OFF	1
ON 1 2 3 4 5 6 7 8	ON	OFF	OFF	OFF	2
ON 1 2 3 4 5 6 7 8	OFF	ON	OFF	OFF	3
ON 1 2 3 4 5 6 7 8	ON	ON	OFF	OFF	4
ON 1 2 3 4 5 6 7 8	OFF	OFF	ON	OFF	5
ON 1 2 3 4 5 6 7 8	ON	OFF	ON	OFF	6
ON 1 2 3 4 5 6 7 8	OFF	ON	ON	OFF	7
ON 1 2 3 4 5 6 7 8	ON	ON	ON	OFF	8
ON 1 2 3 4 5 6 7 8	OFF	OFF	OFF	ON	9
ON 1 2 3 4 5 6 7 8	ON	OFF	OFF	ON	10
ON 1 2 3 4 5 6 7 8	OFF	ON	OFF	ON	11
ON 1 2 3 4 5 6 7 8	ON	OFF	ON	ON	12
ON 1 2 3 4 5 6 7 8	OFF	OFF	ON	ON	13
ON 1 2 3 4 5 6 7 8	ON	OFF	ON	ON	14
ON 1 2 3 4 5 6 7 8	OFF	ON	ON	ON	15

PROGRAMMING MODES (ONLY ART. 4384X VERSIONS)

Switch 8 sets the programming mode: "Standard" (switch in OFF position) or "Advanced" (switch in ON position).
In "Standard" mode settings are made by switches from 1 to 7.
In "Advanced" mode all programming is made via the "VX2X00 Programmer" PC software connected to RS485 via an Art. 481 interface.
In "Advanced" mode, if there is one or more Art. 2306 block exchanger in the system and the next outdoor station is a main entrance that calls each apartment of each Art. 2306, this must be programmed as **MAIN** and have an ID between 9 and 15.

PROGRAMMING THE DOOR OPENING TIME

Switch	Nr.5	Setting Up
ON 1 2 3 4 5 6 7 8	OFF	= 2 seconds
ON 1 2 3 4 5 6 7 8	ON	= 6 seconds

PROGRAMMING THE CONVERSATION TIME

Switch	Nr.6	Setting Up
ON 1 2 3 4 5 6 7 8	OFF	= 1 minute
ON 1 2 3 4 5 6 7 8	ON	= 2 minutes

PROGRAMMING THE ADDRESSING ORDER OF THE BUTTONS

Switch	Nr.7	Setting Up	
		Button matrix	Internal buttons
ON 1 2 3 4 5 6 7 8	OFF	= 1 - 40	= 1, 2
ON 1 2 3 4 5 6 7 8	ON	= 41 - 80	= 41, 42

PROGRAMMING THE MAIN CAMERA SELECTION (ONLY ART. 4384 VERSIONS)

Switch	Nr.8	Setting Up
ON 1 2 3 4 5 6 7 8	OFF	= Main camera internal
ON 1 2 3 4 5 6 7 8	ON	= Main camera external

Switch	Nr.8	Setting Up
ON 1 2 3 4 5 6 7 8	OFF	"Standard" programming mode
ON 1 2 3 4 5 6 7 8	ON	"Advanced" programming mode

Please note that in this case the programming made by switches from 1 to 7 wil be ignored.

RS485 CONNECTION

With switch 8 in ON position the module can be connected using an RS485 bus connection via an RS485 to USB converter (Art. 481) as shown in **Fig. 3**.

This method of connection can be used for programming and setup of the module.

Over distances shorter than 500mt the bus termination jumper on the Art. 481 can be set to the OPEN position.

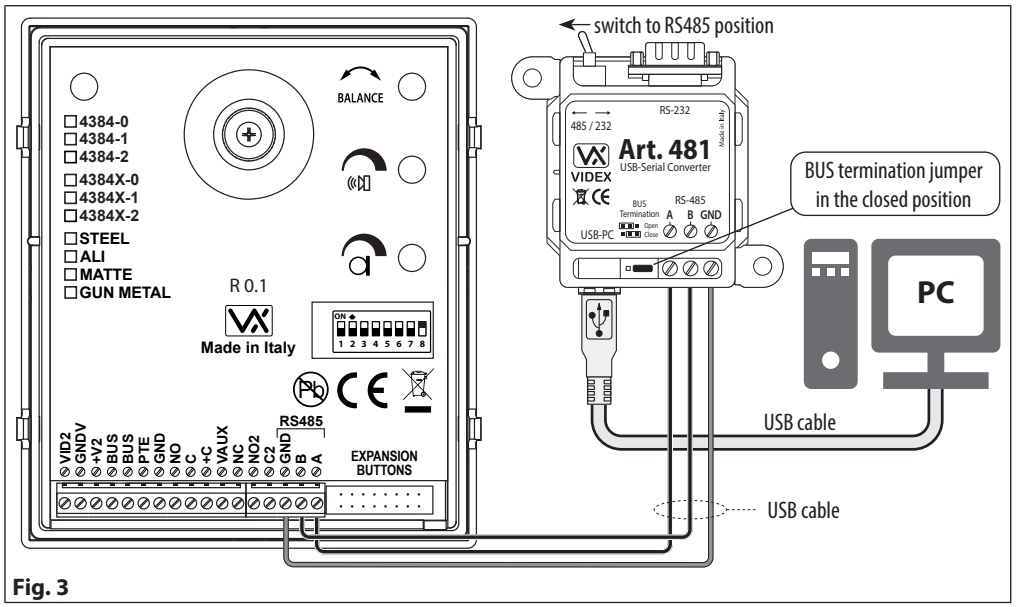

Fig. 3

404x FLAT CABLE CONNECTION

To power the button module connect one of the inbuilt IDC male connectors to the IDC male connector of the camera unit module through the flat cable provided. Further buttons expansion modules can be connected to the free IDC male connector of the previous expansion module (**Fig. 4**).

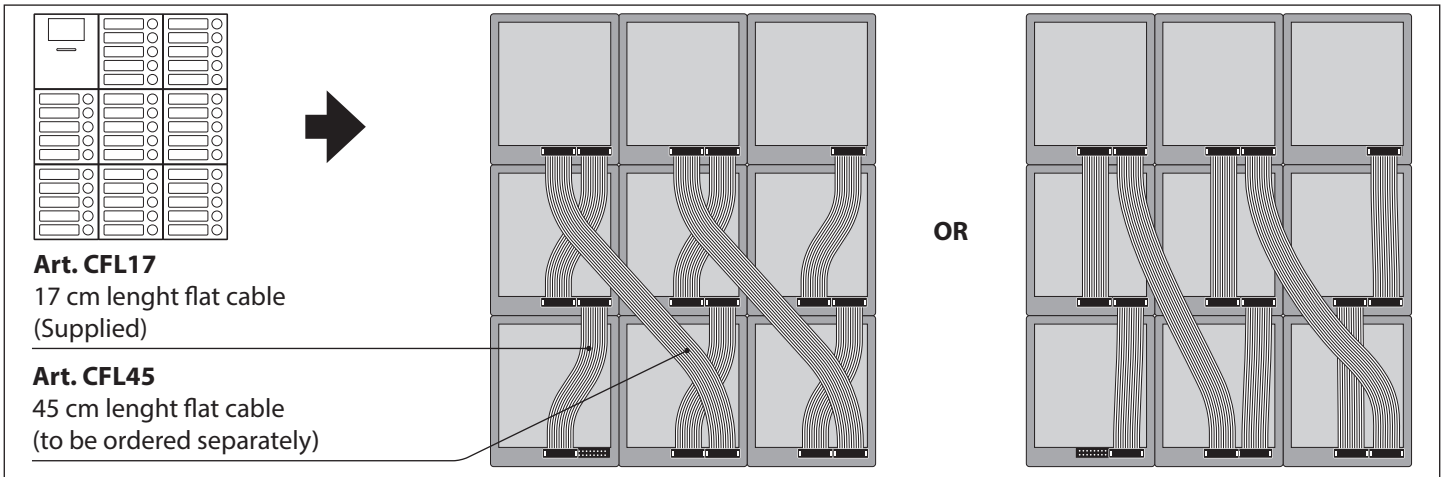

Fig. 4

J2 AND J1 JUMPERS BACKLIT LEDS SETTINGS

For proper functioning please set **J2** and **J1** jumpers of any connected button expansion module Art. 404x as shown in the table below.

NOTE: when more modules are connected, following the connection order, every two modules, the previous must be set as module 1 while the next must be set as module 2.

USING ONE SINGLE EXPANSION BUTTON MODULE

J2	J1
B A	B A

USING A COUPLE EXPANSION BUTTON MODULES

Art. 4384 - Art. 4384X

Expansion button module 1	
J2	J1
B A	B A

Expansion button module 2	
J2	J1
B A	B A

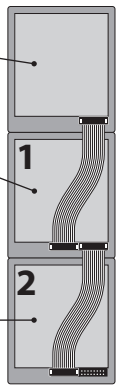

NOTE: to connect more than 2 expansion button modules, please refer also to the installation diagrams.

HOW TO CONNECT AN ELECTRIC LOCK

The "door-open" relay can operate either as "capacitive discharge" or "dry contact" mode.

- In "capacitive discharge" operation mode the relay's contacts, when active, supply directly the lock **(12Vac/dc 1A max)** for a moment. You don't need a power supply for the lock and the door opening time programmed do not affect the activation time.
- In "dry contact" operation mode the relay works in a traditional way, a power supply or a power source is needed to operate the lock **(12-24Vac/dc 2A max)**, and activation lasts according to the door opening time programmed.

⚠ NOTE: in "capacitive discharge" modality C linked to +C (electric lock 12Vac/dc 1A max), the relay time cannot be more than 6 seconds because it could overhead the device.

A possibile deterioration of the mechanical performance of the electric lock, might cause the "capacitive discharge" to malfunction in time. In case the electric lock is used in very dusty environments or in an abnormal climate condition, we suggest to use the "open door" relay in "dry contacts" mode.

12Vac/dc 1A Max

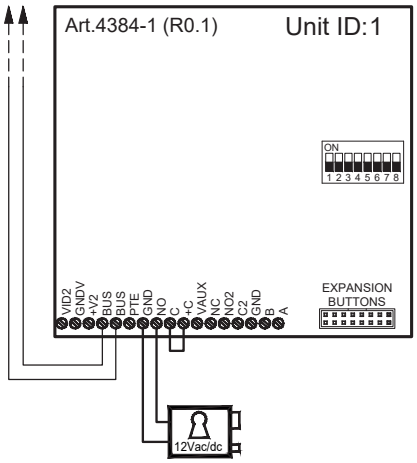

Fig. 5 Using capacitive discharge

12Vac 1.6A Max using Art. 321
24Vac/dc 2A Max using other power supplies

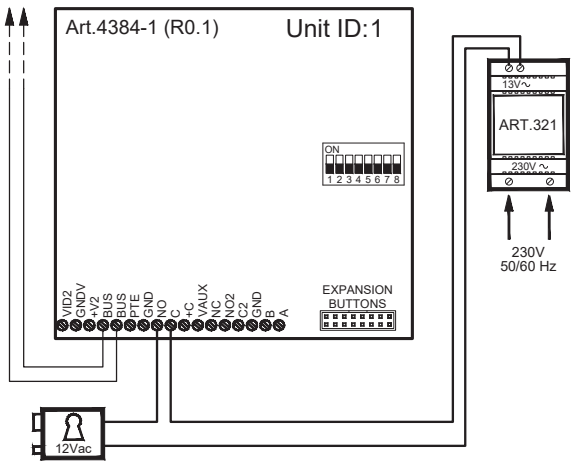

Fig. 6 Using separate P.S.U.

OPERATION

Once the device has been programmed and connected correctly, it will generate upon each pressing of a push button, a code corresponding to the PHONE ID (address programmed on the 8 way dip-switch inside each telephone) of the telephone being called.

TO CALL A USER

Press the relevant button to call the user: 2 quick beeps will indicate if the system is busy, otherwise the call will be signalled by a slow intermittent acoustic signal until the call is answered, the conversation time expires (programmable time) or the call is interrupted by pressing a push button for a minimum of 2 seconds.
A short intermittent acoustic signal plus the relevant LED switched ON indicates that the door is open or the service relay is activated. If a wrong push button is pressed or if there is no answer, a new call will cancel the previous one.

MOUNTING NOTES

When an expansion button module (Art. 404x) is used combined with speaker units with inbuilt camera (Art. 4384-1, Art. 4384-2, Art. 4384X-1, Art. 4384X-2) remember to set the expansion modules properly in order to avoid overwriting the addresses; indeed the inbuilt buttons addresses are already set (**Fig. 7**).

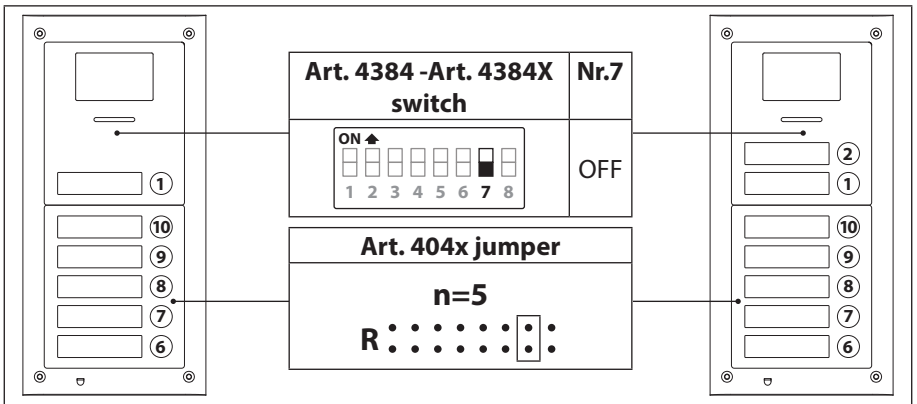

Fig. 7

PROGRAMMING TAGS (ONLY ART. 4384X VERSIONS)

MASTER TAG

The external module is supplied with a master tag. The master tag is programmed in-factory, it is white to easily stand out. This tag enables user tags to be programmed or cleared.
If the master tag is lost, a new one will have to be ordered and a specific procedure performed to program it on the external module. In this instance, it will be necessary to reprogram all the user tags. The module allows to store up to 50 user tags.

USER TAG

The user tags can be programmed on the external module using the master tag to access programming mode:

1. Place the master tag in front of the tag reader.
   ↳ The external module emits two high-pitched **"bip".**

2. Press the call button (the lower call button in the case of a 2-button external module).
   If the speaker unit has no button, press the external button configured as address one: that is the button at the bottom of the extension module configured as addresses interval from 1 to 5.
   ↳ The external module emits a low-pitched continuous **"beeping"** sound.

3. Release the call button.
   ↳ The low-pitched **"beeping"** sound stops.

4. Place the user tag to be programmed in front of the tag reader.
   ↳ The external module emits a high-pitched **"beeping"** sound, the tag is programmed. If you do not remove the tag quickly, may be emitted the alert for an already programmed tag.

5. Repeat the step 4 for each tag to program.

Note: the external module emits three low-pitched **"beeping"** sounds if an already programmed tag is placed in front of the tag reader.

Note: the external module emits three high-pitched **"beeping"** sounds to indicate that its memory is full (50 tags maximum). In this instance, it is not possible to program new tags.

6. To exit programming mode:
   » place the master tag in front of the tag reader, or
   » wait 10 seconds after the most recent programming operation.
   ↳ The external module emits two low-pitched **"beeping"** sounds in order to indicate that it is in operational mode.

USING TAGS

Place a tag in front of the tag reader:

↳ If the tag is programmed, the external module emits two high-pitched **"beeping"** sounds and its relay is activated.

↳ If the tag is not programmed, the external module emits three low-pitched **"beeping"** sounds and its relay is not activated.

CLEARING USER TAGS

⚠ **The following procedure will clear the programming on all user tags.**

Clearing the user tag programming is carried out on the external module using the master tag to run the procedure:

1. Place the master tag in front of the tag reader.
   ↳ The external module emits two high-pitched **"bip".**

2. Press the call button (the lower call button in the case of an external 2-button module) BIP.
   ↳ The external module emits a low-pitched continuous **"beeping"** sound.

3. Release the call button.
   ↳ The low-pitched **"beeping"** sound stops.

4. Press and hold down the call button and place the master tag in front of the tag reader.
   ↳ The external module emitts two low-pitched **"beeping"** sounds, all user tags have been cleared and the external module exits programming mode.

PROGRAMMING A NEW MASTER TAG AND RESETTING THE MASTER CODE TO DEFAULT

If the master tag has been lost/damaged or you forgot the Master Code to use the program from PC VX2X00 follow these steps:

1. Switch off the power.
2. Set all dip-switches OFF.
3. Open the external module housing.
4. Bridge the **PTE** and **GND** terminals or press and hold down the "press to exit" button, if this is wired to the external module (refer to the external module's instructions).

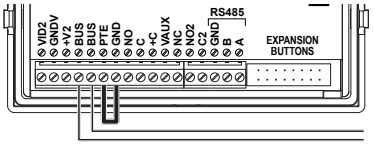

5. Switch the power back on.
   ↪ The external module emits a high-pitched **"beeping"** sound.

6. Remove the short between the **PTE** and **GND** terminals or release the "press to exit" button.
   ↪ The external module emits a high-pitched **"beeping"** sound.

7. Place the master tag in front of the tag reader.
   ↪ The external module emits two high-pitched **"beeping"** sounds, then two low-pitched **"beeping"** sounds, the master tag is programmed, all user tags have been deprogrammed and the external module exits programming mode.

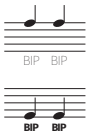

8. Close the external module's housing.

Note: If you use the "Advanced" programming mode remember to set the dip 8 in the ON position before giving power to the system.

CAMERA NOTES

⚠ **PRECAUTIONS ON THE CAMERA**

- **Please note that OPENING THE MODULE WILL INVALIDATE THE WARRANTY. In addition, any dust ingress could COMPROMISE THE IMAGE QUALITY.**
- **REMOVE THE PROTECTIVE FILM ONLY AFTER INSTALLATION AND SUCCESSFUL TESTING HAS TAKEN PLACE to avoid scratches that could AFFECT THE IMAGE QUALITY.**

FIELDS OF VIEW

The fields of view for standard camera are 55° for vertical angle and 115° for horizontal angle while for Wide Angle camera are 80° for vertical angle and 170° for horizontal angle.

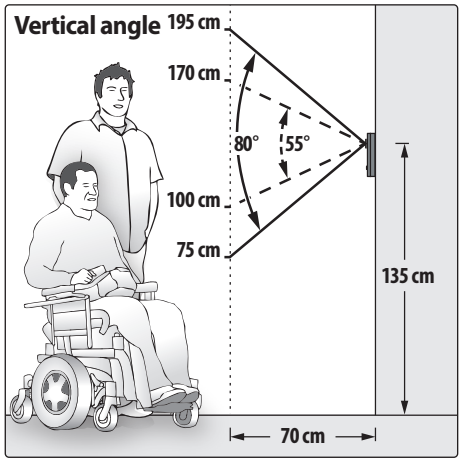

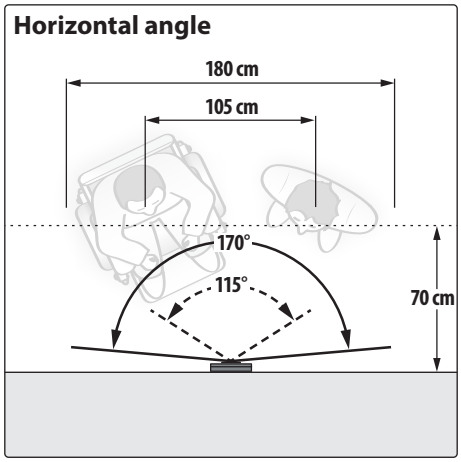

– – – – Standard camera ——— Wide Angle camera

MAXIMUM ILLUMINATION DISTANCE FROM CAMERA AT NIGHT

The illumination LED's within the camera will illuminate the visitor when they are within 50 cm of the camera.

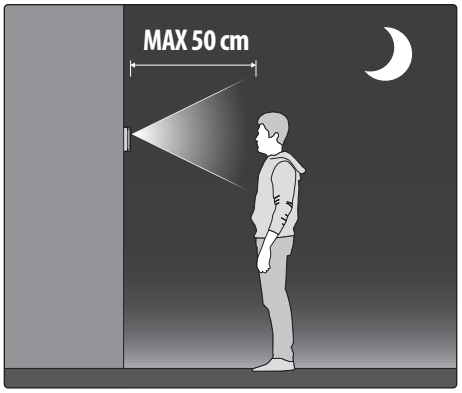

HOW TO REMOVE/INSERT THE CARD NAME HOLDER

- To avoid damage to the module front plate, mask the side that will be in contact with the screwdriver blade;
- Insert the screwdriver (flat side) into the card-holder hole as shown in **Fig. 8**;
- Move the screwdriver to the left as shown in **Fig. 9** to extract the card name holder;
- Edit the card name then replace it inside the holder and refit: insert the holder inside its housing from the left or right side then push the other side until it clips into place.

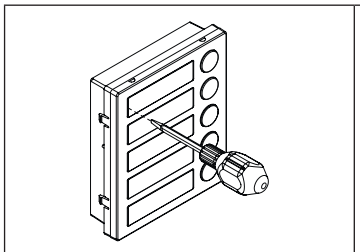
Fig. 8

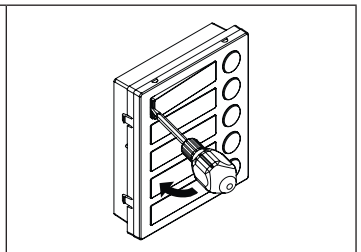
Fig. 9

ADHESIVE GASKET PLACEMENT

Apply the (Y) seal as shown in **Fig. 10**.

ANTI-TAMPERING LOCKS FIXING

Fit the anti-tampering locks (W) as shown in **Fig. 11**.

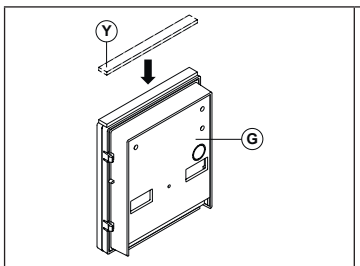

Fig. 10

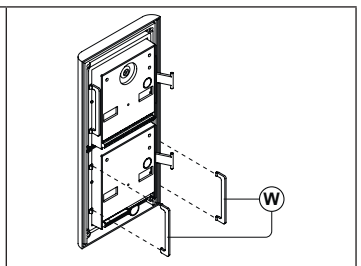

Fig. 11

CONNECTION TERMINALS SIGNALS

	VID2	Video signal input (coax centre core)	
	GNDV	Video signal ground (coax screen and 0V to camera)	
	+V2	12Vdc output to supply the external camera if necessary	**Max 12Vdc 150mA**
	BUS	BUS Connection terminals	
	BUS		
	PTE	"Push to exit" active low input Cannot be connected in parallel to other **PTE**'s of other outdoor stations. The maximum distance the **PTE** signal can travel is 10 meters	
	GND	Ground	
Relay 1	**NO**	Door open relay normally open contact 1	**Max 12-24 Vac/dc 2A**
Relay 1	**C**	Door open relay common contact 1	
Relay 1	**+C**	Capacitor discharge output to supply the electric lock (when **+C** linked to **C**)	**Max 12Vac/dc 1A**
Relay 1	**VAUX**	30Vdc output to supply the Art. 4846 module backlight	**Max 30Vdc 20mA**
Relay 1	**NC**	Door open relay normally closed contact 1	**Max 12-24 Vac/dc 2A**
Relay 2	**NO2**	Door open relay normally open contact 2	**Max 60Vdc or 40Vac 0.1A**
Relay 2	**C2**	Door open relay common contact 2	

GND	Ground	**Only 4384X versions**
B	RS-485 serial interface	
A		

TECHNICAL SPECIFICATIONS

Call buttons:	Up to 42	
Camera resolution:	976 x 496 pixel, PAL - 700TV line	
Memory TAG: (only 4384X version)	Up to 50 (up to 1000 when using PC software)	
Power consumption:	Standby:	60+10mA for each 404x
	Operating:	100+10mA for each 404x
	Peak:	250+10mA for each 404x
Working voltage:	Supplied by the BUS line	
Working temperature:	-20 +60 °C	

CLEANING OF THE PLATE

Use a clean and soft cloth. Use moderate warm water or non-aggressive cleansers.

Do not use:

- abrasive liquids
- chlorine-based liquids
- metal cleaning products
- antioxidant products

Art. 4901 Digital codelock module

Rev.0.1

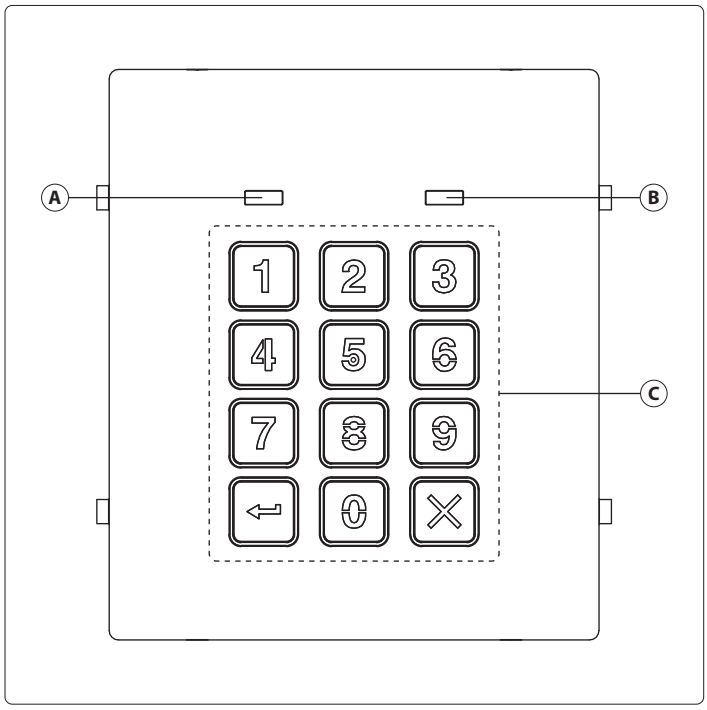

Fig. 1 Front

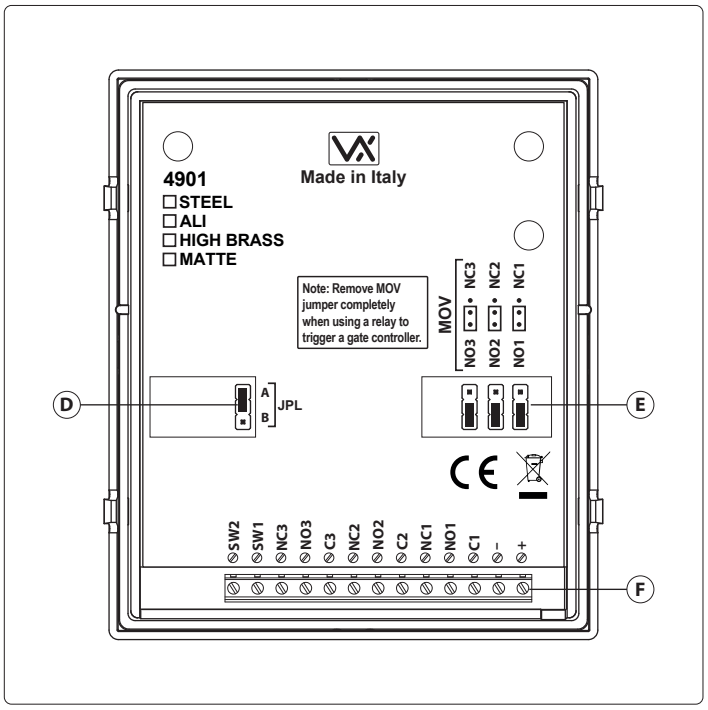

Fig. 2 Back

DESCRIPTION

The Art.4901 is manufactured from 316 grade brushed stainless steel and the module features 12 stainless steel buttons, backlit in blue (Keys **0 - 9**, **ENTER** and **CLEAR**) and 2 LED's for progress information during use and programming. With three integral relays each with common, normally open and normally closed connections and two inputs to enable the external triggering of relays one and two (for example, push to exit button). Key presses are signalled both acoustically and visually while each button press has a tactile feel. Entering the correct code followed by **ENTER** will activate the relevant relay. Programming is carried out through the same keypad following a simple programming menu. The module can be combined with other 4000 Series modules in an audio or video intercom system.

LEGEND

- (A) Green LED
- (B) Red LED
- (C) Backlit keypad
- (D) JPL jumper
- (E) MOV jumpers
- (F) Connection terminals

MAIN FEATURES

- 3 **C**, **NC**, **NO** relay outputs (24Vac/dc – 3A max)
- 3 Programmable secret codes (one for each relay)
- Each relay can be set to be activated for a specific time (01 to 99 seconds) or to work as latch
- Two active low inputs to command directly the relay 1 and 2
- Programming menu guarded by a 4-8 digit programmable engineer's code
- Visual and Acoustic signal during operating and programming
- Keypad illumination LEDs.

GENERAL DIRECTIONS FOR INSTALLATION

In order to achieve the best results from the schematics described it is necessary to install only original VIDEX equipment, strictly keeping to the items indicated on each schematic and follow these General Directions for Installation:

- The system must be installed according to national rules in force, in any case the running of cables of any intercom unit must be carried out separately from the mains
- All multipair cables should be compliant to CW1308 specification (0.5mm twisted pair telephone cable).
- Cables for speech line and service should have a max resistance of 10 Ohm
- Lock release wires should be doubled up (Lock release wires and power supply wires should have a max resistance of 3 Ohm)
- The cable sizes above can be used for distances up to 50m. On distances above 50m the cable sizes should be increased to keep the overall resistance of the cable below the RESISTANCES indicated above
- Double check the connections before power up
- Power up the system then check all functions.

LOCK RELEASE BACK EMF PROTECTION

A varistor must be fitted across the terminals on AC lock release **(Fig. 3)** and a diode must be fitted across the terminals on a DC lock release **(Fig. 4)** to suppress back EMF voltages. Connect the components to the lock releases as shown in figures.

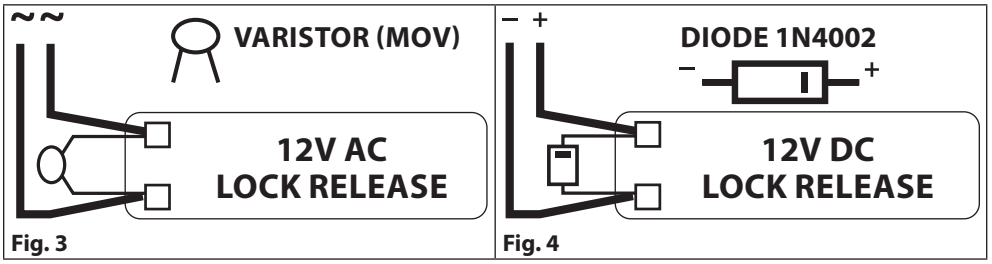

Fig. 3 Fig. 4

BUZZER BACK EMF

When using intercoms with buzzer call (Art. 924/926, SMART1/2, 3101/2, 3001/2 and 3021/2) add one 0.1uF (100nF) capacitor between terminals 3 and 6 on the telephone.

BUILT-IN RELAYS – BACK EMF PROTECTION

The Art. 4901 includes selectable back EMF protection on the relays. The jumpers marked **MOV** (one jumper for each relay) are used to select the protection type. When using a fail secure lock with connections **C** & **NO** the jumper should be in the **NO** position. When using a fail open lock with connections **C** & **NC** the jumper should be in the **NC** position and when using the codelock to trigger a gate controller or another third party controller the jumper should be removed completely (this disables the protection on the relay).

BACK LIGHT ADJUSTMENT JUMPER (JPL)

The jumper JPL (**Fig. 2**, (D)) is used to adjust the brightness and determine the operation of the backlit buttons. There are four brightness settings for the backlit buttons and two programming modes (Mode 1 and 2) for the jumper.

The two modes that can be programmed change the functionality of the jumper **JPL**. The table beside indicates the programming mode, the position of the jumper and the operation of the backlit buttons.

	Jumper Position		Back light Operation
Mode 1	**A (default)**	A / B	Back light on low brightness in standby. Full brightness when any buttons are pressed.
Mode 1	**B**	A / B	Back light OFF in standby. Full brightness when any buttons are pressed.
Mode 2	**A or B**	A / B or A / B	Back light on full brightness all of the time.
	JPL removed in either Mode	A / B	No back light, the back light is completely disabled.

PROGRAMMING MODE 1 (DEFAULT MODE, JPL = A)

Follow the steps below to set the codelock to Mode 1:

1. Disconnect the power from the Art. 4901 codelock
2. Short out terminals **–** and **SW2**
3. Press and hold down button **1** [1] and keep it pressed down while the power is switched back ON
4. When power is restored to the codelock wait for the module to emit a single beep and the red status LED (**Fig. 1**, (B)) to flash once
5. Listen for the confirmation tone and wait for the red status LED (**Fig. 1**, (B)) to flash once again
6. Release button **1** [1] and remove the short between terminals **–** and **SW2**
7. Set the jumper **JPL** to the desired position.

PROGRAMMING MODE 2

Follow the steps below to set the codelock to Mode 2:

1. Disconnect the power from the Art. 4901 codelock
2. Short out terminals **–** and **SW2**
3. Press and hold down button **2** [2] and keep it pressed down while the power is switched back ON
4. When power is restored to the codelock wait for the module to emit a double beep and the red status LED (**Fig. 1**, (B)) to flash once
5. Listen for the confirmation tone and wait for the red status LED (**Fig. 1**, (B)) to flash once again
6. Release button **2** [2] and remove the short between terminals **–** and **SW2**
7. Set the jumper **JPL** to the desired position.

BACK LIGHT AND BUTTON OPERATION

If the back light programming mode is set to Mode 1 (with jumper **JPL** in either the **A** or **B** position) when a button is pressed on the keypad the back light will switch to full brightness for approximately 10 seconds.
After this time the back light will either switch OFF or switch back to low brightness (depending on the jumper position) unless another button has been pressed within the 10 second period in which case the back light will stay on full brightness for a further 10 seconds.
The exception to this is if the back light programming mode is set to Mode 2, **i.e.** the back light will be on full brightness all of the time or if the jumper is removed the back light will be disabled.

PROGRAMMING

- Enter the **ENGINEER'S CODE**: first time type six times **1** (**111111** factory preset) and press **ENTER** (The red LED will illuminate)
- Confirm **ENGINEER'S CODE** (typing again the same) or type the new code (4 to 8 digits) then press **ENTER** (Melody). Pressing twice the **ENTER** button without changing the **ENGINEER'S CODE**, will exit from the programming
- Enter the code (4 to 8 digits) to enable **RELAY 1** or re-enter the existing code then press **ENTER** (Melody)
- Enter the **RELAY 1** operation time (2 digits 01 to 99 **I.E.** 05=5 seconds, 00= remain open time) or re-enter the existing time then press **ENTER** (Melody)
- Enter the code (4 to 8 digits) to enable **RELAY 2** or re-enter the existing code then press **ENTER** (Melody)
- Enter the **RELAY 2** operation time then press **ENTER** (Melody)
- Enter the code (4 to 8 digits) to enable **RELAY 3** or re-enter the existing code then press **ENTER** (Melody)
- Enter the **RELAY 3** operation time then press **ENTER** (Melody)
- The system is ready to use (the red LED will be off).

PROGRAMMING NOTES

- After pressing enter following a command, press **ENTER** a further twice to exit the programming menu.

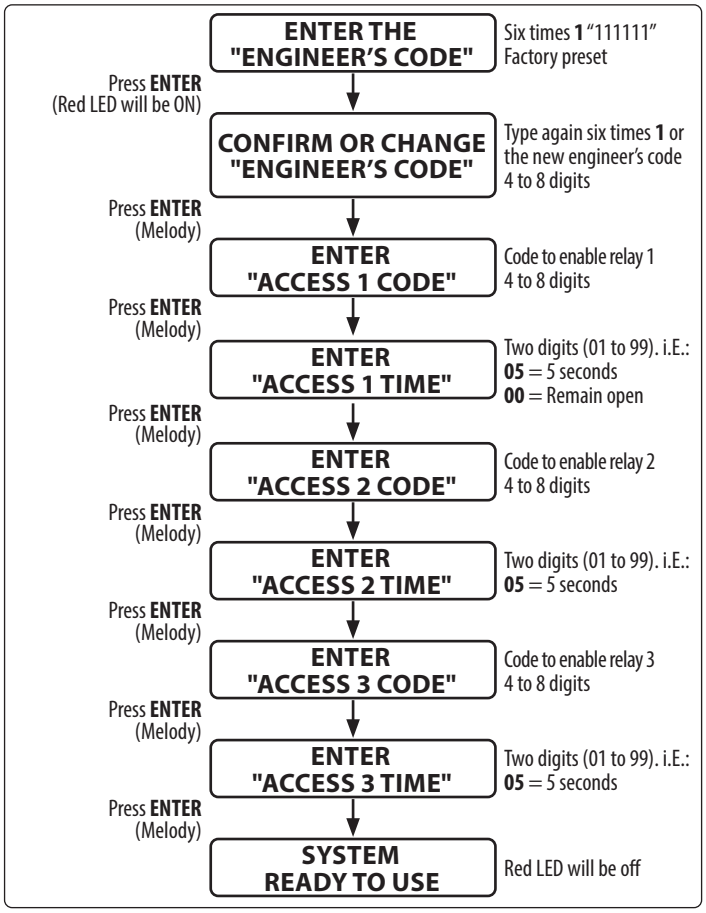

RETURN SYSTEM TO PRESET ENGINEER'S FACTORY CODE

- Turn off power to code lock
- Keep **ENTER** button pressed while turning the power back on
- Release **ENTER** button
- The engineer's code is now set to **111111** (six times one).

OPERATION

- Type in the programmed code and press **ENTER**
- If the code is correct, the green LED will illuminate for approx. 2 seconds and the relay relevant to the code will operate for the programmed time
- If a wrong code is entered, a continuous melody will sound for 4 or more seconds, according to the number of mistakes
- To switch off any relay while operating, type in the relevant code then press the **CLEAR** button.

OPERATION NOTES

- To operate relays together, set the same code for each relay.
- If a wrong code is entered, the system will lock out for 5 seconds which will increase each time a wrong code is entered. The system will operate only when the correct code is entered.

ADHESIVE GASKET PLACEMENT

Apply the (Y) seal as shown in **Fig. 5**.

ANTI-TAMPERING LOCKS FIXING

Fit the anti-tampering locks (W) as shown in **Fig. 6**.

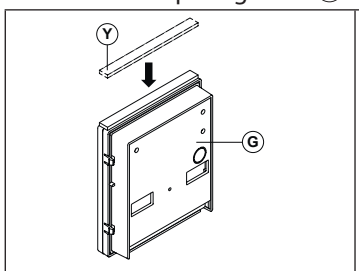

Fig. 5

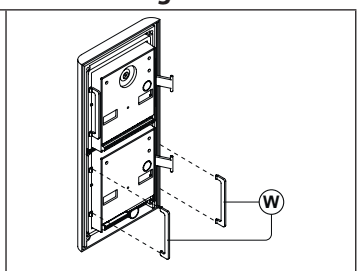

Fig. 6

CONNECTION TERMINALS SIGNALS

SW2	Relay 2 command signal (active low)	
SW1	Relay 1 command signal (active low)	
NC3	Relay 3 normally closed contact	**Max 24Vac/dc 3A**
NO3	Relay 3 normally open contact	
C3	Relay 3 common contact	
NC2	Relay 2 normally closed contact	
NO2	Relay 2 normally open contact	
C2	Relay 2 common contact	
NC1	Relay 1 normally closed contact	
NO1	Relay 1 normally open contact	
C1	Relay 1 common contact	
–	12/24Vac/dc power input	
+		

CLEANING OF THE PLATE

Use a clean and soft cloth. Use moderate warm water or non-aggressive cleansers.

Do not use:
- abrasive liquids
- chlorine-based liquids
- metal cleaning products
- antioxidant products

TECHNICAL SPECIFICATION

Power consumption:	Standby:	20mA
	Operating:	70mA
Working voltage:	12/24 Vac/dc	
Working temperature:	-20 +60° C	

4000 Series Surface and flush mounting door station installation

EXAMPLE: INSTALLING A FOUR MODULE OUTDOOR STATION

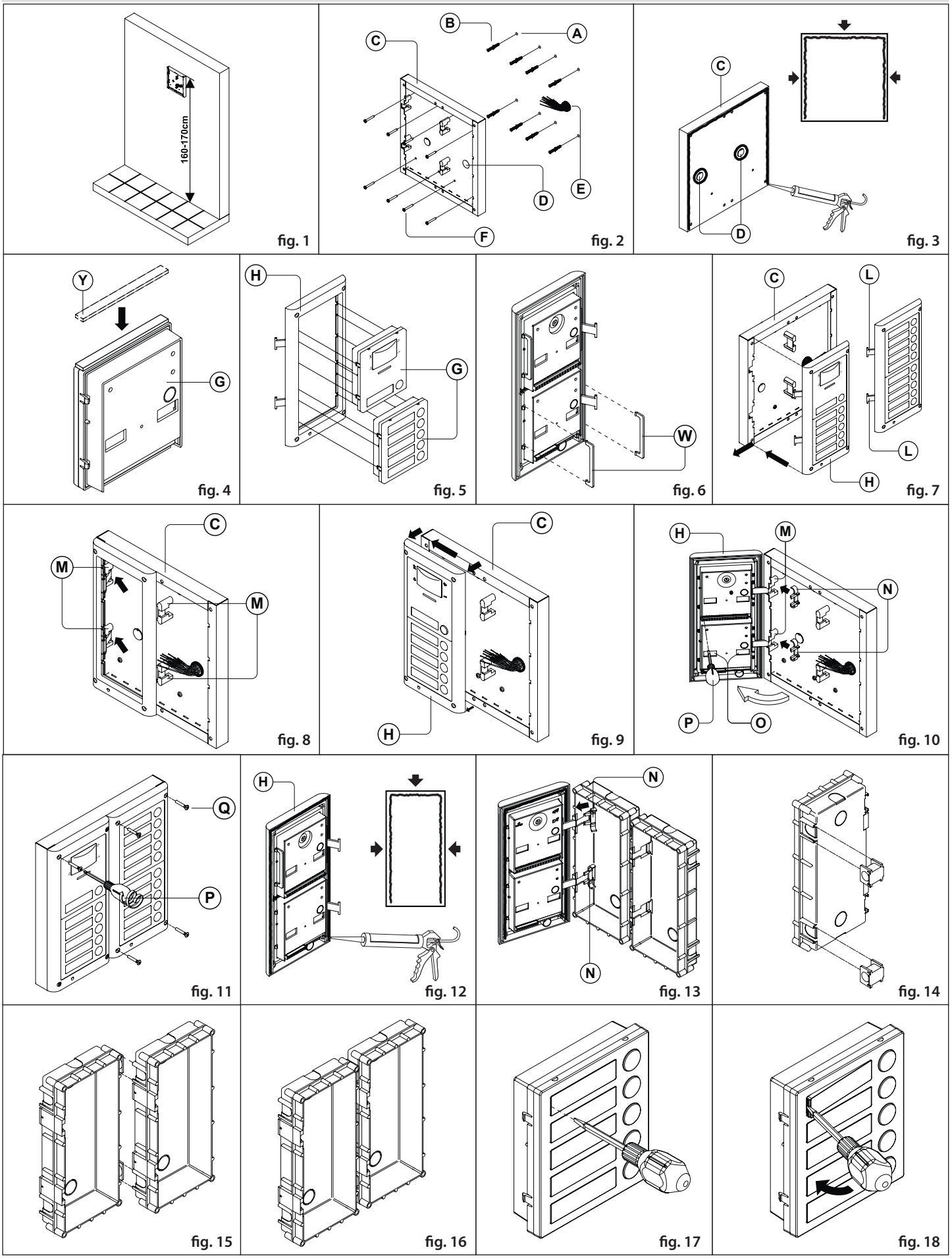

fig. 1 fig. 2 fig. 3 fig. 4 fig. 5 fig. 6 fig. 7 fig. 8 fig. 9 fig. 10 fig. 11 fig. 12 fig. 13 fig. 14 fig. 15 fig. 16 fig. 17 fig. 18

INSTALLING A SURFACE MOUNT DOOR STATION

1. Place the surface box against the wall (165-170cm between the top of the box and the floor level as shown in **Fig. 1**) and mark the fixing holes for the wall plugs and the hole for the cables (E) **(fig. 2).** Observe the orientation of the box with the hinge on the left;

> ⚠ **In order to prevent water ingress we highly recommend using a silicon sealant between the wall and the back box (C) ON THE LEFT, TOP AND RIGHT SIDES ONLY AND AROUND ALL HOLES (D).**
> **DON'T USE SILICON SEALANT ON THE BOTTOM SIDE OF THE BACK BOX (Fig.3);**

2. As shown on **Fig. 2,** drill the fixing holes (A)**,** insert the wall plugs (B) and feed the cables (E) through the surface box opening (D), fix surface box (C) to the wall using the screws (F);
3. Apply the (Y) silicon sealant on top of each module as shown in **Fig. 4;**
4. Before installation of the module support frame, hook the modules (G) to the support frame (H) as shown in **Fig. 5** then, as shown in **Fig. 6,** fit the two anti-tampering locks (W) for each module (do the same for the second module support frame);
5. When you have more than one support frame, hook the support frame to the surface box starting from the left. For convenience we will described how to attach the left frame but the same must be carried out for the right frame. As shown in **Fig. 7,** hook the module support frame (H) (complete with modules) to the surface box (C) moving the frame as suggested from pointers. Ensure that the pivots (L) **(Fig. 7)** go inside the relevant housing (M) as shown in **Fig. 8;**
6. As shown on **Fig. 9,** pull back the module support frame (H) while moving it slightly to the left as suggested by the pointers;
7. As shown in **Fig. 10,** open the module support frame (H) as suggested by the pointer, hook the hinge locks (N) to the hinges (M)**,** make the required connections using the screwdriver provided (P) (flat blade end) and make the required adjustment by adjusting the settings (through openings (O)) and adjust trimmers;
8. Repeat the same operations described above for the second module support frame (or for the third if available);
9. When the system has been tested and is working correctly, move back the module support frames carefully, fix them to the surface box using the screwdriver provided (P) (torx end) and the pin machine torx screws (Q) **(Fig. 11). Note: do not over tighten the screws more than is necessary.**

INSTALLING A FLUSH MOUNTING DOOR STATION

When flush mounting and the number of modules is greater than 3, the required back boxes need to be linked together (before embedding them in the wall) as shown on **Fig. 14, 15 and 16:**

- Arrange the back boxes and remove knockouts to allow cables to be fed from one back box to the other;
- Hook the spacers to first back box then hook the second back box to obtain the result shown on **Fig. 16;**

1. Protect the module support frame fixing holes from dust then embed the back box into the wall (165-170cm between the top of the box and the floor level as shown on the **Fig. 1**) feeding the cables (E) **(Fig. 2)** through a previously opened hole in the box. Observe the direction of the box ensuring the hinge is on the left and take care that the box profile is in line with the finished wall profile;

> ⚠ **In order to prevent water ingress we highly recommend using a silicon sealant between the module support frame (H) and the back box ON THE LEFT, TOP AND RIGHT SIDES ONLY.**
> **DON'T USE SILICON SEALANT ON THE BOTTOM SIDE OF THE MODULE SUPPORT FRAME (Fig.12);**

2. Continue from step **4** of surface mounting instructions , but at step **7** hook the hinge locks (N) as shown on **Fig. 13.**

> ⚠ **Note: if additional holes are made in the surface box, oxidation problems may appear unless the unprotected metal is coated with a protective paint.**

NOTES

- The screwdriver's blade has two sides, one flat and one torx, to select one of them unplug the blade from the screwdriver body and plug it into the required side.
- The example shows the use of only one back box bottom hole for wires, this is done to keep file drawings clear. Naturally the installer can use the left hole or the right or both if required.

HOW TO REMOVE THE CARD NAME HOLDER

- To avoid damage to the module front plate, tape the side that will be in contact with the screwdriver blade;
- Insert the screwdriver (flat side) into the card-holder hole as shown in **Fig. 17;**
- Move the screwdriver to the left as shown in **Fig. 18** to extract the card name holder;
- Edit the card name then replace it inside the holder and refit: insert the holder inside its housing from the left or right side then push the other side until it clips into place.

Art. 6788 7" hands free colour display digital videophone

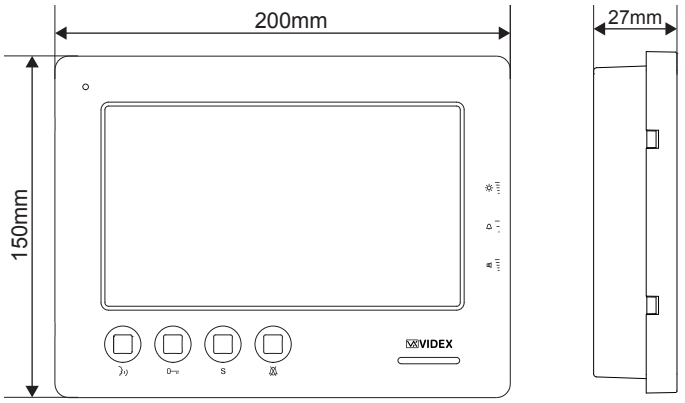

Fig. 1 Front

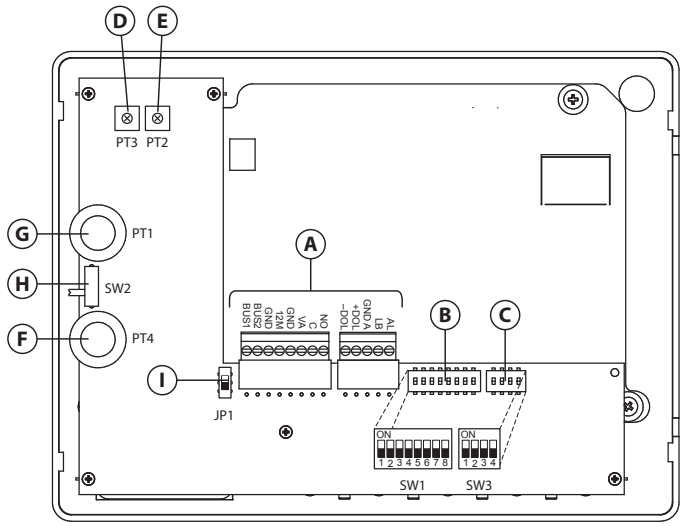

Fig. 2 Back

DESCRIPTION

Surface mount hands free intelligent Videophone using 7" full colour active matrix LCD monitor for VX2300.
Including 4 buttons: Service, Privacy/Bus relay activation/Camera switch/Call reject, Door-open/Intercommunicating call, Answer/OFF/Camera recall/Push to talk plus 3 LED's for visual indication of privacy, door open services enabled and functions activated.
Adjustments & programmable options: call tone volume on 3 levels (low, medium, high), speech volume, call tone melody, number of rings, and privacy duration .
Also includes a local bell function.

LEGEND

- (A) Connection terminals
- (B) 8 Way dip switch bank
- (C) 4 Way dip switch bank
- (D) Contrast adjustment trimmer
- (E) Hue adjustment trimmer
- (F) Speech volume control sliding wheel
- (G) Brightness control sliding wheel
- (H) Call tone volume switch
- (I) Bus termination switch

PUSH BUTTONS

S **Service push button**
When pressed it links internally the terminals **C** and **NO** on the connection terminals.

Privacy ON-OFF push button
To enable the function press this button when the videophone is in standby. The service is automatically disabled when the programmed time expires (the privacy duration time can be programmed) or manually by pressing again the button.

Activate the outdoor station 2nd output
During a conversation, press this button once to activate the secondary relay of outdoor station (only with Art.4304, 4304X, 4384 and 4384X PCB Rev.0.1 and all versions of Art.4312).

Activate bus relay board Art. 2305
To activate a bus relay, during a conversation, press this button quickly as many times as the address value of the relay (1..8).

Camera switch push button
During the conversation, press and keep pressed the button until the camera switches. Repeat the operation to switch back to main camera.

Call Reject button
During an incoming call, press this button to reject the call. The visitor doesn't receive any warning of the call rejected.

Door open push button
Press this button to open the door when you are in conversation or you are receiving a call.

Intercommunication push button
For an intercommunicating call, press as many times as the extension or address value to call (see **SW2** Intercommunication Settings).

Answerpush button
On an incoming call, operation of this button allows the user to answer and converse with the visitor. The relevant LED will illuminate.

Switch off button
With the system switched on (monitor on), momentary operation of the button will switch the video monitor off.
The videomonitor will also automatically switch off after a time delay if the button is not pressed. The relevant LED will switch off.

Camera Recall push button
Press as many times as the DEVICE N. of the door station to switch on.

Simplex button
Pressing and holding the button for more than 3 seconds will switch the videomonitor into SIMPLEX speech mode. Press and hold the button to speak to the caller (LED will flash rapidly), release the button to listen (LED will flash slowly). If the button is not pressed for 10 seconds the videomonitor will switch off. The videomonitor will revert to duplex speech when another call is made.

LEDS

Privacy on LED
It illuminates when the privacy service is enabled.

Generic use LED
It is controlled from the terminals **+DOL** and **–DOL**. Normally used to signal the door status (open or closed).

ON LED
It illuminates when the videophone is switched ON.

CONTROLS

Speech volume control
(sliding wheel).

Call tone volume control
(3 levels).

Brightness control
(sliding wheel).

PT2 **Colour intensity control trimmer**
(rotate left to increase or right to decrease).

PT3 **Contrast control trimmer***
(rotate left to increase or right to decrease).
*Not available in some LCD versions.

JP1 **Bus termination switch**
(lower position = BUS termination active, upper position = BUS termination disabled).

PROGRAMMING

The videophone setup consists of the following settings:
- Number of rings
- Melody selection
- Privacy duration
- Unit address (1..99, switches 1 to 7 of **SW1**)
- Bus termination (open or close, jumper **JP1**)
- Intercommunication mode (between apartments or within apartment, switch 1 of **SW3**)
- Extension address (1..4, switches 2,3 of **SW3**)
- Slave mode (switch 4 of **SW3**).

The programming of the number of rings, melody and privacy duration are carried out through the videophone push buttons, all other settings are carried out on the two dip-switch banks (**SW1** and **SW3**) inside the device.
It is necessary to remove temporary the power supply after making any programming changes.

NUMBER OF RINGS, MELODY SELECTION AND PRIVACY DURATION

All programming options are available only when the system is in standby.

NUMBER OF RINGS.
- Keep pressed the button until the two LEDs and switch on.
- Press the button for the number of times corresponding to the required number of rings to set. A beep confirms each time the button is pressed.
- Once the required number of rings is reached, wait approx 5 seconds for the two LED's to switch off. The new value is stored.

MELODY SELECTION
- Keep pressed the button until the two LEDs and switch on. The unit emits the first melody.
- Press the button and keep it pressed to listen the next melody. Repeat the operation until the required melody is found.
- Once the required melody is found, wait approx 5 seconds for the two LED's to switch off. The new melody is set.

Notes:
- **All the 10 melodies, except the second one, will play in a lower tone with respect to the tone set.**
- **The second melody will play in a progressive tone from low to high. When selecting this melody it is advisable to set at least 4 rings.**

PRIVACY DURATION

- Keep pressed the button until the two LEDs and are switched on.
- Press the button for the number of times corresponding to the required privacy duration to set. Each time the button is pressed, the duration is increased by 15 minutes: i.e. to set 2 hours, press the button 8 times.
  Default: infinite. Max value: 20 hours. To program infinite privacy time don't press any buttons.
- Once the required privacy time is reached, wait approx 5 seconds for the two LED's to switch off. The new duration is set.

DEVICE ADDRESS – SW1.1..7

The table below shows how to set the address of the device. Considering that **ON = 1** and **OFF = 0**, multiply each digit for the relevant decimal weight then sum values obtained to get the address: **E.g.** as highlighted in the table **ON, OFF, ON, OFF, OFF, ON, OFF** in binary is equal to **1010010** then multiplying each digit for the relevant decimal weight you obtain the address that is **37**.

SW1.1..7

SWITCHES STATUS							BINARY CODE - DECIMAL WEIGHT							ADDRESS
1	**2**	**3**	**4**	**5**	**6**	**7**	**1**	**2**	**4**	**8**	**16**	**32**	**64**	
ON	OFF	OFF	OFF	OFF	OFF	OFF	1	0	0	0	0	0	0	1
OFF	ON	OFF	OFF	OFF	OFF	OFF	0	1	0	0	0	0	0	2
ON	ON	OFF	OFF	OFF	OFF	OFF	1	1	0	0	0	0	0	3
OFF	OFF	ON	OFF	OFF	OFF	OFF	0	0	1	0	0	0	0	4
ON	OFF	ON	OFF	OFF	ON	OFF	1	0	1	0	0	1	0	37
ON	ON	OFF	OFF	OFF	ON	ON	1	1	0	0	0	1	1	99

Note: the maximum number of units allowed is 100 but the address of each unit can be a value between 1 and 99.

POWER SUPPLY VERSION WITH MEMORY BOARD

If the videophone is the only indoor station installed in the system (i.e. one way videokit) the additional power supply unit it is not required. Set the dip-switch 8 to ON position to enable the supply from the BUS. In position OFF, the memory board supply must be provided by a local 12Vdc power supply unit like slave videomonitors (see **"Slave mode - SW3.4" on page 25**).
Note: do not set dip-switch 8 to ON for more than one videomonitor on the same BUS line.

VIDEOPHONE END OF LINE TERMIANTION

Looking at the videophone from the rear:

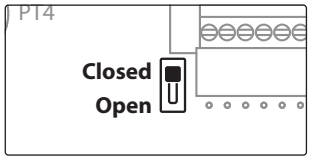

Move the switch (I) to the upper position to enable the BUS termination (**Closed** position, factory setting)

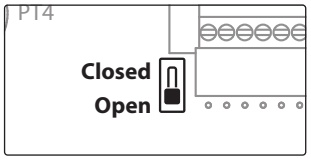

Move the switch (I) to the lower position to disable the BUS termination (**Open** position)

In case of more units (intercoms or videophones) in a parallel connection (BUS wires are connected to the terminals of the first unit then from this to the second and so on up to 4 units max) the BUS termination must be enabled only for the last unit in the chain while on all other units it must be set to disabled.

INTERCOMMUNICATION MODE – SW3.1

This switch establishes the intercommunication mode: in OFF position (default) intercommunication is between units in the same apartment (same addresses but different extension); in ON position the intercommunication is between units in different apartments (different addresses).

SW3.1

<u>On installations where there are more than one intercom/videophone in the same apartment and intercommunication between different apartments is required, only one intercom/videophone may be set with this function (SW3.1=ON, SW3.2=OFF, SW3.3=OFF). The other intercom/videophones in the apartment must be set for local intercommunication with extension addresses "2-4" (slaves). From the intercom/videophone set for intercommunication with other apartments it will not be possible to intercommunicate within the apartment but slave extensions 2-4 will be able to intercommunicate with each other within the apartment.</u>

EXTENSION NO – SW.3.2..3

If the intercommunication between apartments is enabled (dip **1** of **SW3** = ON) and there is only one device in the flat leave these two switches in default position (both to OFF). Otherwise, if the intercommunication is between the same apartment (dip **1** of **SW3** = OFF), or there is more than one device in the flat, set the extension addresses starting always from 1 (master) then add up to a maximum of 3 slaves. During the external call, all video monitors in the same flat will ring but the video will be shown only from the videophone with extension address 1 (master).

SW3.2..3

2	3	EXTENSION NO.
OFF	OFF	1 (default, master)
ON	OFF	2 (slave)
OFF	ON	3 (slave)
ON	ON	4 (slave)

SLAVE MODE - SW3.4

SW3.4

This set up concerns the answering mode of the video monitor when there is more than one unit in the same apartment (same address but different indoor stations).

OFF: during a call, only the video monitor with extension 1 (master) will show the video (default).

ON: the video monitor will be switched on independently of the extension address: in this case the video monitor must be supplied locally using a power supply Art. 323/12 or Art. 2321, see notes on **+12VM** and **+VAUX** on "Connection Terminals Signals" table. The local power supply is required from the second video monitor with dip **4** of **SW3** ON (see diagram 007 on **page 28**).

If you set for one slave videophone, you must set ON the same switch also for the relevant master videophone.

NOTE: WHEN USING CST2310 CONCIERGE

SW1 **SW3**

To enable calling to the concierge and receiving calls from the concierge; on the master device (**SW3** dip **2** and **3** = OFF), set dip switch **8** of **SW1** to ON and also dip switch **1** of **SW3** to OFF. Intercommunication is between devices in the same apartment.

CONNECTION TERMINALS SIGNALS

BUS1	Bus input	
BUS2	Bus input	
GND	Ground	
12M	+12Vdc power supply input (Art. 323/12) for version with Memory Board option or auxiliary power supply input (to be used when two or more slave monitors are ringing together with the switch 4 of **SW3** is set to ON)	
GND	Ground	
VA	+30Vdc power supply input (Art. 2321) to be used when two or more slave monitors are ringing together with the switch 4 of **SW3** set to ON	
C	Dry contact. Internally linked to **NO** when the S button is pressed.	**Max 35Vdc, 50mA**
NO	Dry contact. Internally linked to **C** when the S button is pressed.	
−DOL	Auxiliary LED power supply input (ground)	
+DOL	Auxiliary LED power supply input (+12Vdc)	
GND A	Ground output for use in combination with **AL** & **LB** active low inputs	
LB	Local Bell input (active low) Cannot be connected in parallel to other **LB**'s of other monitors. The maximum distance the **LB** signal can travel is 10 meters	
AL	Alarm input	

TECHNICAL SPECIFICATIONS

Housing and mounting:	6700 Series - Surface
Display resolution:	800 x 480 pixel
Push buttons:	4
Programming:	Through buttons and dip-switches
Controls:	Speech volume Call tone volume Brightness Colour intensity Contrast
Power consumption:	Standby (dip-switch 8 OFF): 1/3mA Standby (dip-switch 8 ON): 80mA Operating: 200mA Peak: 400mA
Working voltage:	Supplied by the BUS line

MEMORY BOARD

This device is also available in the version with memory board (Art. 6788/VM).
If you have that version, please refer to the **"6200, 6300, 6400 and 6700 Series Memory Board"** user manual for installation and use.
The manual is available for download: click/tap or scan the QR code.

6700 Series Wall mounting instructions

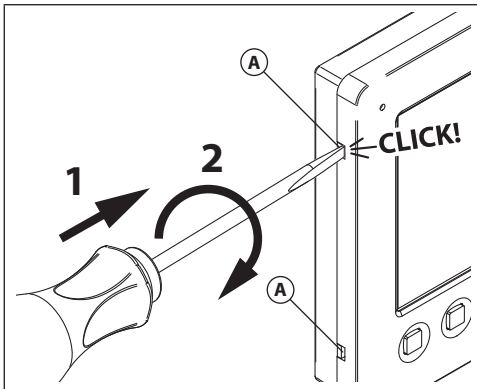

Fig. 1

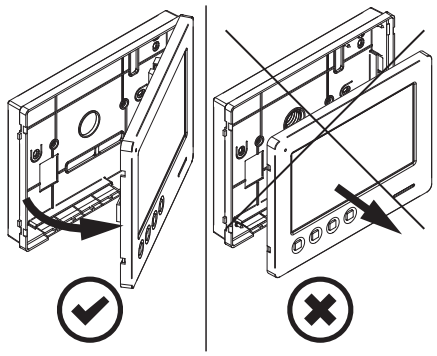

Fig. 2

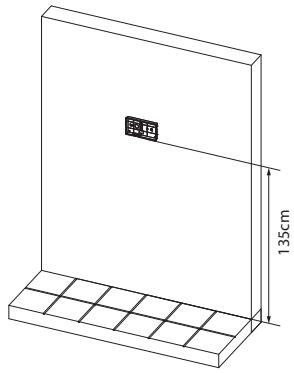

Fig. 3

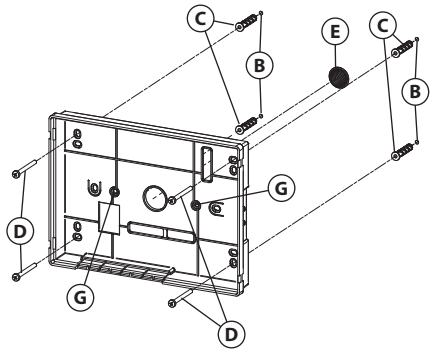

Fig. 4

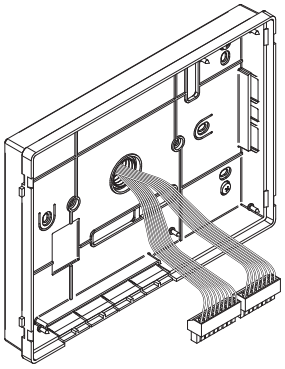

Fig. 5

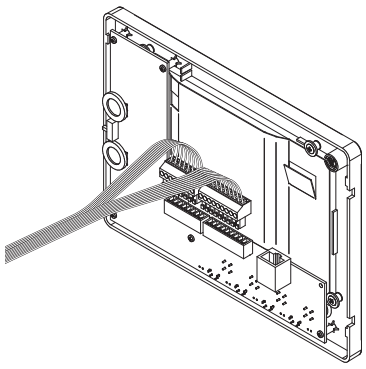

Fig. 6

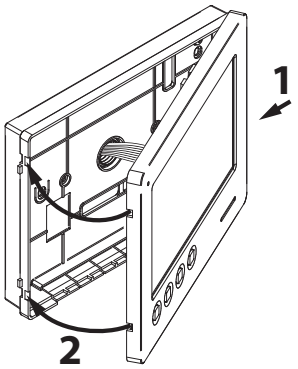

Fig. 7

1. In order to install the videophone, it is necessary to remove the cover, which contains all the electronics, from the base: insert a 5.5mm flat screw driver into the clip Ⓐ then rotate clockwise until you listen a **"CLICK!".**
   Repeat the same operation with the other clip as shown in **Fig. 1**.
2. Pull outwards the left part of the cover as shown in **Fig. 2**. **Don't pull the cover straight**.
3. Put the base of the unit on the wall at approx 135cm from the finished floor (**Fig. 3**) to match the points for the fixing holes Ⓑ (**Fig. 4**) remembering that the wires Ⓔ (**Fig. 4**) must be fed through the large hole Ⓕ (**Fig. 4**). If you use the flush mounting box 503, embed it into the wall vertically at approx. 140cm from the finished floor and the base.
4. Following **Fig. 4**, make the holes Ⓑ, insert the wall plugs Ⓒ and fix the base with the screws Ⓓ feeding the wires Ⓔ through the hole Ⓕ. If you have used the box 503, fix the base to the wall through the holes Ⓖ using the screws Ⓓ.
5. As shown in **Fig. 5**, connect the wires to the removable terminals following the provided installation diagram. Connect the terminal blocks to the electronics contained in the cover as shown in **Fig. 6**. Test system before closing.
   Contrast and hue trimmers can be adjusted only if the videophone is open. To activate the display and see changes use the "Camera Recall" function by pressing button**.**
   Note: while testing the system, it is advisable to hold the cover with your hand.
6. Once testing is complete and all the necessary adjustments are made, close the unit as shown in **Fig. 7**: first hook in the right part and then the left part until you hear a **"CLICK!".**

Art. 2321-2321/P Power supplies

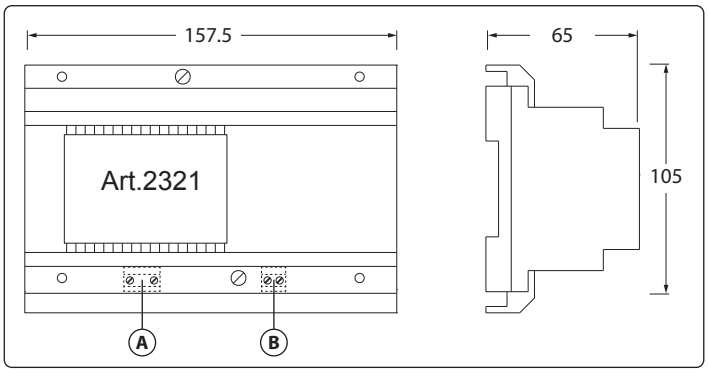

Fig. 1 Art. 2321

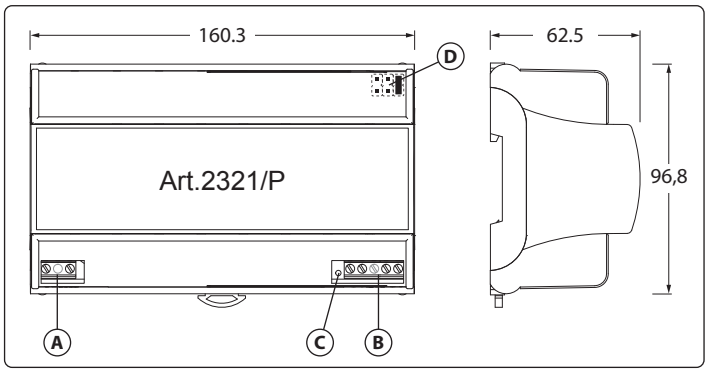

Fig. 2 Art. 2321/P (Rev.0.1)

DESCRIPTION

Power supplies specifically designed for VX2300 digital system.
The Art. 2321 can be used for systems with 1 entrance up to 50 users.
Art. 2321/P is for systems with more than 1 entrance (max 4 using Art. 2301) and up to 50 users.
For more than 50 users it is necessary to add another Art. 2321 to the BUS (to be placed in the middle of the BUS line, see installation diagram on **page 9**).

LEGEND

- (A) Mains input
- (B) BUS terminals
- (C) Power on LED (only Art. 2321/P)
- (D) Voltage output adjustment jumper (only Art. 2321/P)

MOUNTING INSTRUCTION

1. Remove the terminal side covers by unscrewing the retaining screws (**Fig. 3**);
2. Fix the power supply to a DIN rail (**Fig. 4**) or directly to the wall using two expansion type screws (**Fig. 5**);
3. Isolate the mains using the circuit breaker mentioned above then make the connections as shown on the installation diagrams (if provided);
4. Check all connections and secure the wires into the terminals;
5. When all connections are made replace and fix the terminal covers with the relevant screws (**Fig. 6**);
6. Restore the mains.

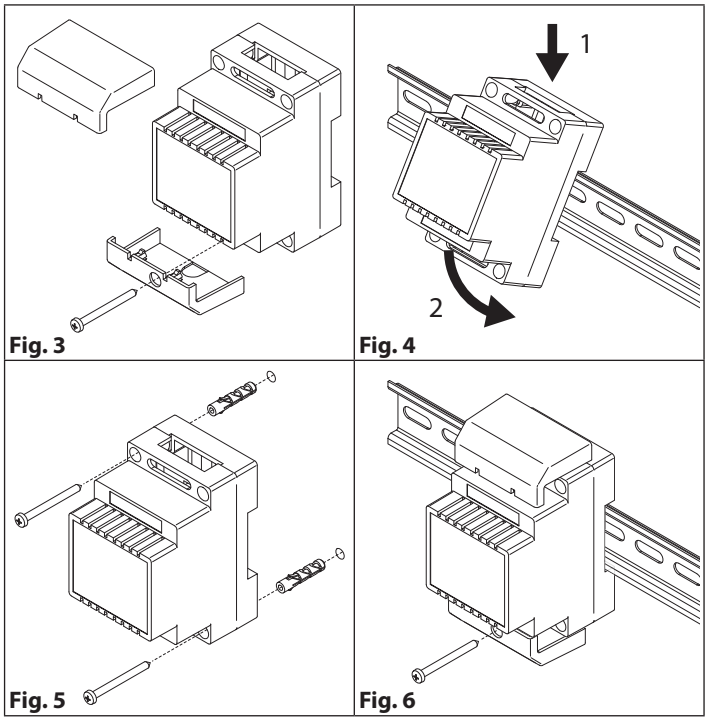

Fig. 3 **Fig. 4** **Fig. 5** **Fig. 6**

WARNING!
CONNECTION TO MAINS

The system must be installed only by a qualified eletrician and in accordance with national rules in force and installation diagrams (if provided).
In particular we recommend that:

- **The system is connected to the mains through an all-pole circuit breaker which has a contact separation of at least 3mm in each pole and shall connect all poles simultaneously**
- **The all-pole circuit breaker shall be placed for ease of access and the switch shall remain readily operable.**

Only for indoor use in dry places. Do not execed the maximum power load indicated.

⚠ **NOTE: After each change on the programming of the door station, videophone or any other device connected to the system it is necessary to restart the system (power off then power on).**

CONNECTION TERMINALS AND JUMPERS

0	Mains input	
~230V		
BUS +	BUS terminals	
BUS –		
BUS +	BUS terminals (only Art. 2321/P)	
V1	Output voltage adjustment jumper (only Art. 2321/P). Set **V2** or **V3** in the presence of long distances or CAT.5 cables. Set **V3** when used with Art. 2301.	**V1** = 35Vdc **V2** = 36Vdc **V3** = 37Vdc
V2		
V3		

TECHNICAL SPECIFICATIONS

	Art. 2321	**Art. 2321/P**
Housing:	9 Module A Type DIN box	9 Module A Type DIN box
Mounting:	DIN bar or directly to the wall	DIN bar (provided)
Controls:		Output voltage (3 levels)
Mains voltage:	230 Vac ~ 50/60 Hz	230 Vac ~ 50/60 Hz
Output voltage:	32 Vdc 0.8 A	35 Vdc 1,5 A
Working temperature:	-20 +60 °C	-20 +60 °C

Art. 2322 Power supply converter from BUS line to 12 Vdc

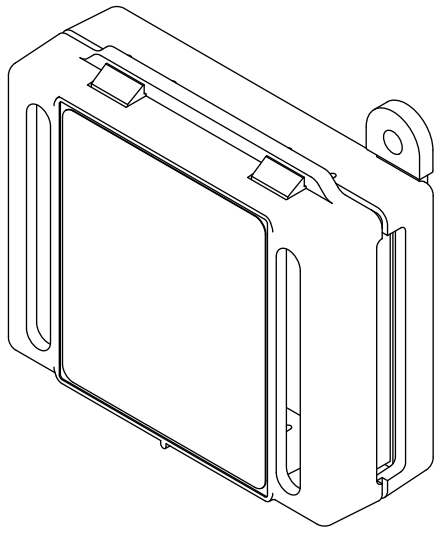

Fig. 1

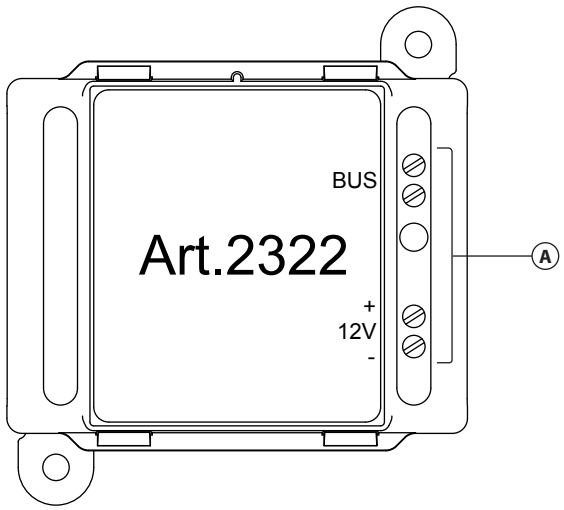

Fig. 2

DESCRITPION

When this unit is connected to the BUS line it generates a +12Vdc – 100mA power source. This unit can be used to supply peripherals such as the Art. 4901 or Art. 4902 without the need for an additional power supply.

Please note: The peripherals must not require more than 100mA.

LEGEND

Ⓐ Connection terminals

CONNECTION TERMINALS

BUS	BUS line inputs
BUS	
12V+	12Vdc – 100mA output
12V– (0V)	

TECHNICAL SPECIFICATION

Housing:	Plastic box 50x60x20mm
Mounting:	Direct wall
Power supply:	Supplied by the BUS line
Working temperature:	-20° +60° C

Art. 4042 .. 4045 Single row button expansion modules
Art. 4042D .. 4045D Double row button expansion modules

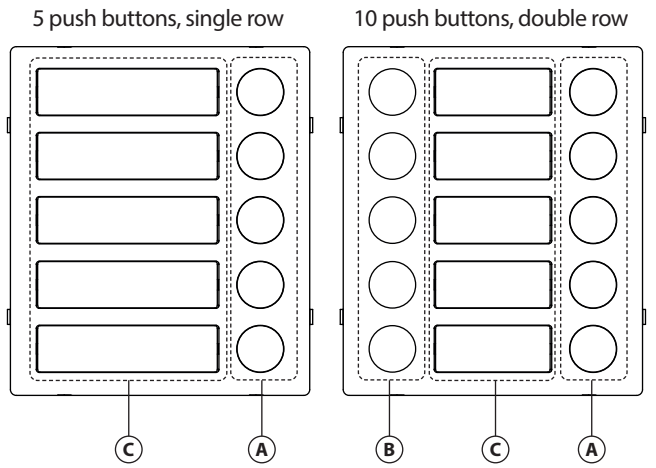

Fig. 1 Front

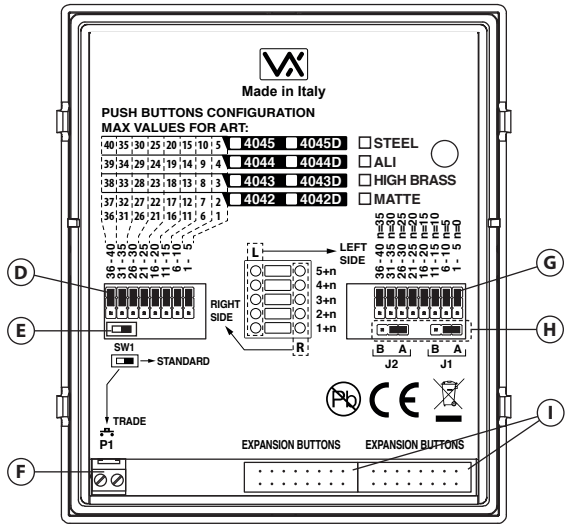

Fig. 2 Back

DESCRIPTION

Push button modules allow the expansion of the number of call buttons. Available in versions single row with 2, 3, 4 or 5 call push buttons and in double row with 4, 6, 8 or 10 call push buttons.
Specific for use in combination with VIDEX IPURE, VX2200, VX2300 camera moduels/speaker units and GSM speaker untis with IDC connector.

LEGEND

- (A) Right side push button
- (B) Left side push button (only for double row versions)
- (C) Name plate holders
- (D) Right side push button configuration jumpers
- (E) **SW1** switch
- (F) Trade button connection
- (G) Left side push button configuration jumpers
- (H) **J2** and **J1** jumpers to configure illumination LEDs
- (I) IDC male connectors

AVAILABLE VERSIONS

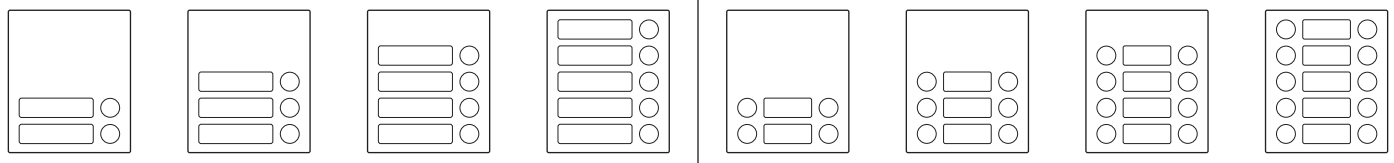

Single row				Double row			
Art. 4042	**Art. 4043**	**Art. 4044**	**Art. 4045**	**Art. 4042D**	**Art. 4043D**	**Art. 4044D**	**Art. 4045D**
2 call button	3 call button	4 call button	5 call button	4 call button	6 call button	8 call button	10 call button

PUSH BUTTON CONFIGURATION

The button addressing depends on the jumper position. The table below shows the numbers assigned to the buttons according to the jumper position.

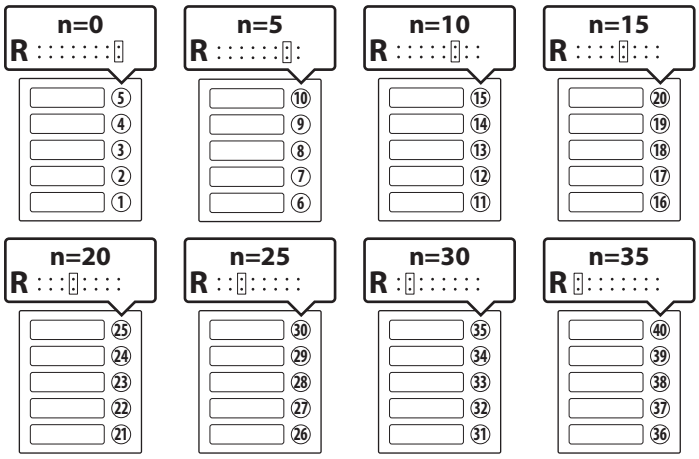

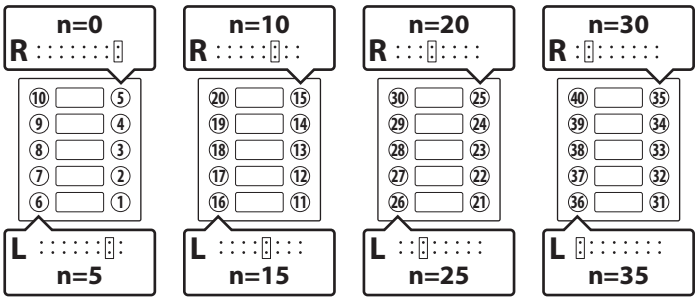

Note: when you use a double row module, take care to place jumpers in different position so to have different addresses for left side and right side button.

Art. 4042 .. 4045 Single row button expansion modules

Art. 4042D .. 4045D Double row button expansion modules

POWER SUPPLY

To give power supply to the module connect one of the inbuilt IDC male connector (I) to the IDC male connector of the camera unit module through the flat cable provided. A further buttons expansion module can be connected to the free IDC male connector of the previous expansion module (**Fig. 3**).

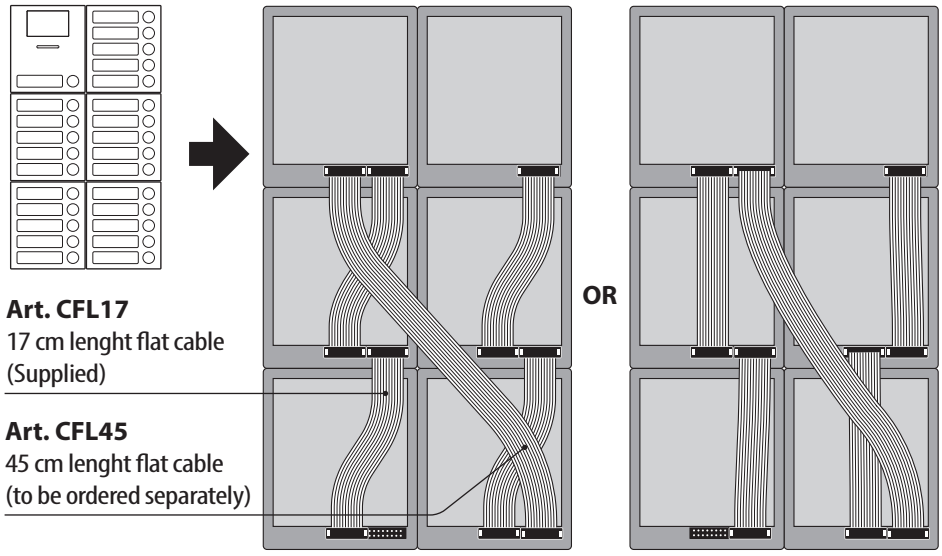

Fig. 3

SW1 SETTINGS

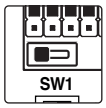

Left position = TRADE
Trade button connection related to push button no.1 (only if **SW1** is swithed on Trade side).

Right position = STANDARD
Standard matrix call buttons (default).

J2 AND J1 BACKLIT LEDS SETTINGS

DEFAULT SETTING

J2	J1
B A	B A

USING WITH ART. 4384, 4384X, 4304, 4304X AND ONE SINGLE EXPANSION BUTTON MODULE

J2	J1
B A	B A

USING WITH ART. 4384, 4384X, 4304, 4304X AND A COUPLE EXPANSION BUTTON MODULES

Art. 4384, 4384X, 4304, 4304X

Expansion button module 1	
J2	J1
B A	B A

Expansion button module 2	
J2	J1
B A	B A

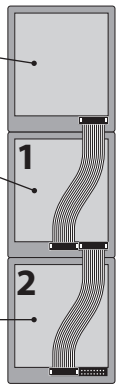

NOTE: to connect more than 2 expansion button modules, please refer also to the installation diagrams (**page 11**).

HOW TO REMOVE/INSERT THE CARD NAME HOLDER

- To avoid damage to the module front plate, mask the side that will be in contact with the screwdriver blade;
- Insert the screwdriver (flat side) into the card-holder hole as shown in **Fig. 4**;
- Move the screwdriver to the left as shown in **Fig. 5** to extract the card name holder;
- Edit the card name then replace it inside the holder and refit: insert the holder inside its housing from the left or right side then push the other side until it clips into place.

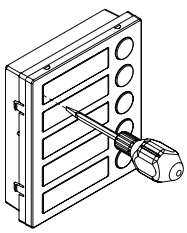

Fig. 4

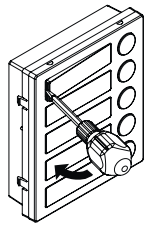

Fig. 5

ADHESIVE GASKET PLACEMENT

Apply the (Y) seal as shown in **Fig. 6**.

ANTI-TAMPERING LOCKS FIXING

Fit the anti-tampering locks (W) as shown in **Fig. 7**.

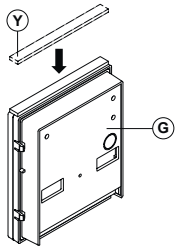

Fig. 6

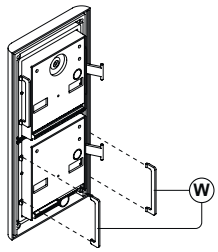

Fig. 7

TECHNICAL SPECIFICATIONS

Power consumption:	40 mA max
Working voltage:	12Vdc supplied by the flat
Working temperature:	-20 +60 °C

CLEANING OF THE PLATE

Use a clean and soft cloth. Use moderate warm water or non-aggressive cleansers.

Do not use:

- abrasive liquids
- chlorine-based liquids
- metal cleaning products
- antioxidant products

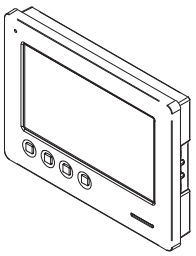

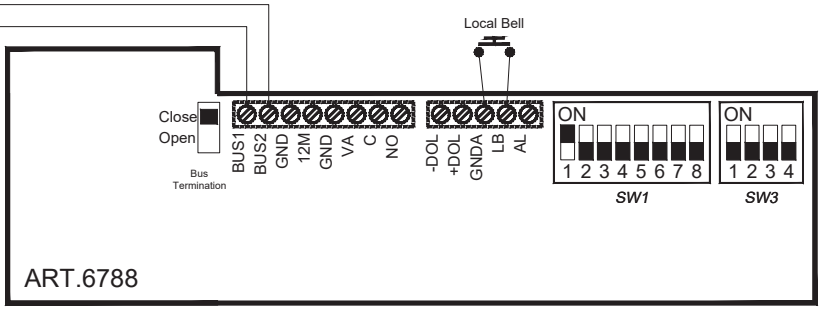

Extension N.1
Videophone:1

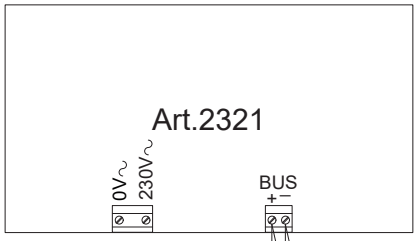

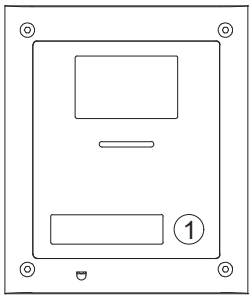

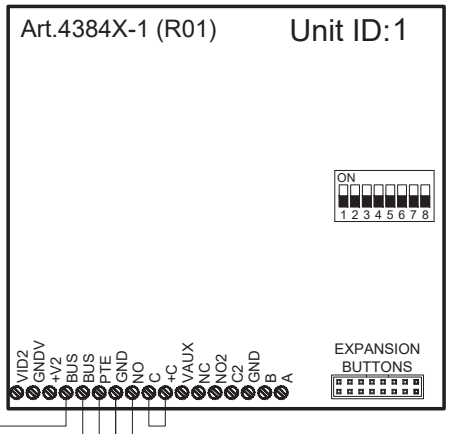

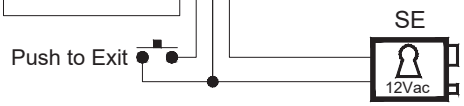

⚠

After each change on the programming of the door station, videophone or any other device connected to the system it is necessary to restart the system (power off then power on).

Dopo ogni cambiamento nella programmazione del posto esterno, del videocitofono o del relè, è necessario togliere l'alimentazione al sistema e ripristinarla affinchè le variazioni vengano recepite dai rispettivi dispositivi.

Après chaque modification de la programmation du poste de rue, du vidéophone ou de tout autre appareil connecté au système, il est nécessaire de redémarrer le système (mise hors tension puis sous tension).

Title: ESVK-1/6788, ESVK-1S/6788 One Way Videokit		Data creazione: 11/05/2023	Foglio 1 / 1
Titolo: ESVK-1/6788, ESVK-1S/6788 Videokit Monofamiliare		Data modifica: 11/05/2023	
Videx Electronics S.p.A. Via del Lavoro 1, 63846 Monte Giberto (FM) Phone: +39 0734 631669 - Fax +39 0734 631669 www.videx.it - info@videx.it	Notes: .	Autore: Marco Rongoni-L.S	
	Note: .	Cod.File: 4384-67h-001c.dwg	

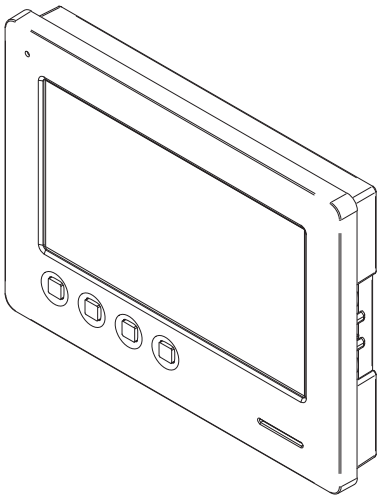

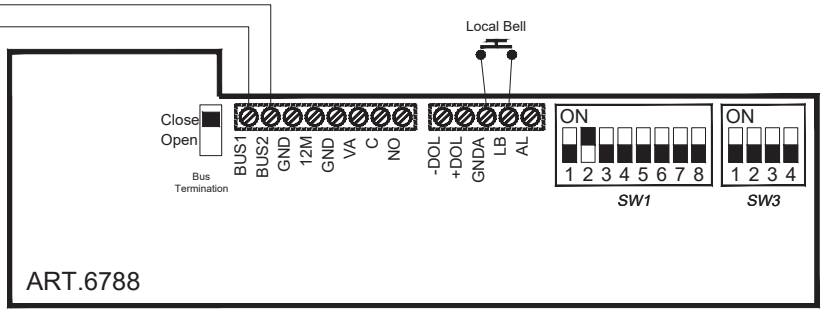

Extension N.1
Videophone:2

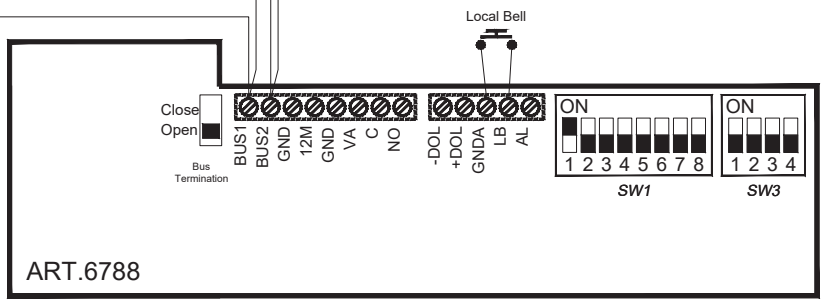

Extension N.1
Videophone:1

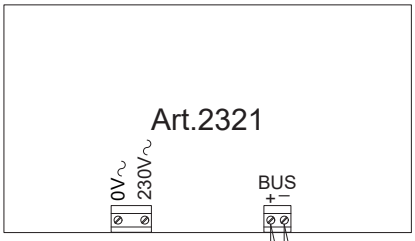

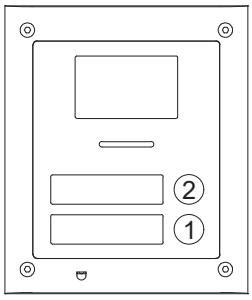

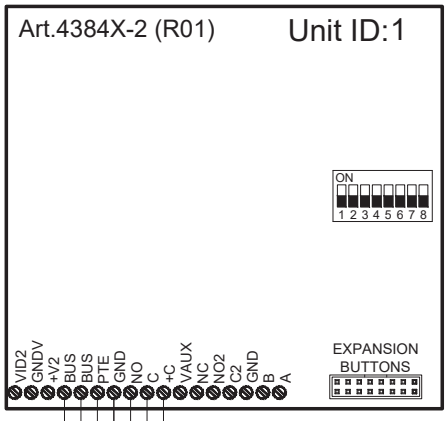

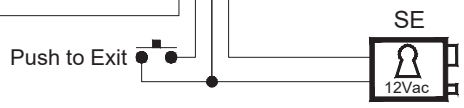

⚠

After each change on the programming of the door station, videophone or any other device connected to the system it is necessary to restart the system (power off then power on).

Dopo ogni cambiamento nella programmazione del posto esterno, del videocitofono o del relè, è necessario togliere l'alimentazione al sistema e ripristinarla affinchè le variazioni vengano recepite dai rispettivi dispositivi.

Après chaque modification de la programmation du poste de rue, du vidéophone ou de tout autre appareil connecté au système, il est nécessaire de redémarrer le système (mise hors tension puis sous tension).

Title: ESVK-2/6788, ESVK-2S/6788 Two Way Videokit		Data creazione: 11/05/2023	Foglio 1 / 1
Titolo: ESVK-2/6788, ESVK-2S/6788 Videokit Bifamiliare		Data modifica: 11/05/2023	
Videx Electronics S.p.A. Via del Lavoro 1, 63846 Monte Giberto (FM) Phone: +39 0734 631669 - Fax +39 0734 631669 www.videx.it - info@videx.it	Notes: . Note: .	Autore: Marco Rongoni-L.S	
		Cod.File: 4384-67h-002c.dwg	

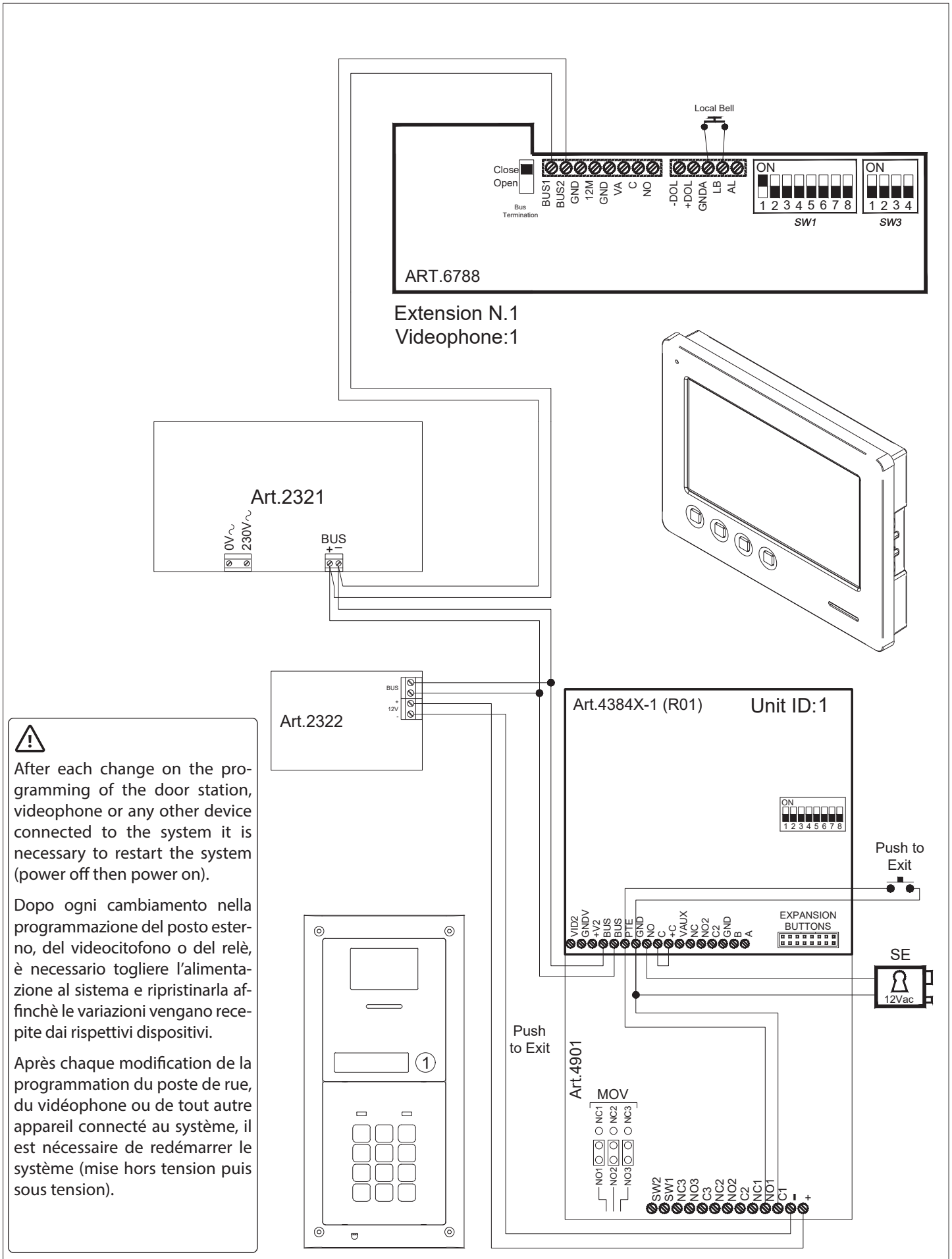

After each change on the programming of the door station, videophone or any other device connected to the system it is necessary to restart the system (power off then power on).

Dopo ogni cambiamento nella programmazione del posto esterno, del videocitofono o del relè, è necessario togliere l'alimentazione al sistema e ripristinarla affinchè le variazioni vengano recepite dai rispettivi dispositivi.

Après chaque modification de la programmation du poste de rue, du vidéophone ou de tout autre appareil connecté au système, il est nécessaire de redémarrer le système (mise hors tension puis sous tension).

Title: ESVKC-1/6788, ESVKC-1S/6286 One Way Videokit		Data creazione: 11/05/2023	Foglio 1 / 1
Titolo: ESVKC-1/6788, ESVKC-1S/6788 Videokit Monofamiliare		Data modifica: 11/05/2023	
Videx Electronics S.p.A. Via del Lavoro 1, 63846 Monte Giberto (FM) Phone: +39 0734 631669 - Fax +39 0734 631669 www.videx.it - info@videx.it	Notes: . Note: .	Autore: Marco Rongoni-L.S	Cod.File: 4384-67h-003c.dwg

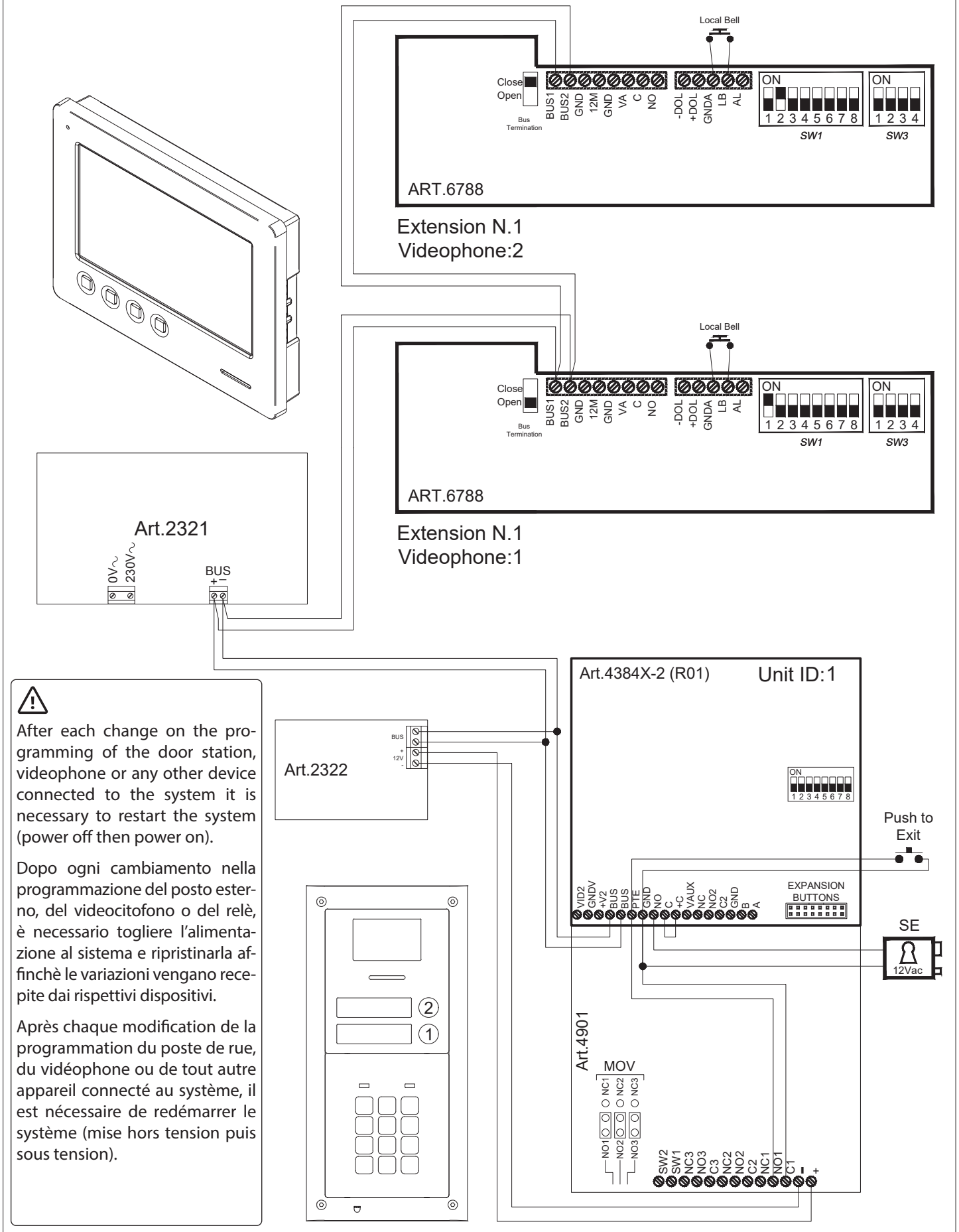

After each change on the programming of the door station, videophone or any other device connected to the system it is necessary to restart the system (power off then power on).

Dopo ogni cambiamento nella programmazione del posto esterno, del videocitofono o del relè, è necessario togliere l'alimentazione al sistema e ripristinarla affinchè le variazioni vengano recepite dai rispettivi dispositivi.

Après chaque modification de la programmation du poste de rue, du vidéophone ou de tout autre appareil connecté au système, il est nécessaire de redémarrer le système (mise hors tension puis sous tension).

Title: ESVKC-2/6788, ESVKC-2S/6788 Two Way Videokit		Data creazione: 11/05/2023	Foglio 1 / 1
Titolo: ESVKC-2/6788, ESVKC-2S/6788 Videokit Bifamiliare		Data modifica: 11/05/2023	
Videx Electronics S.p.A. Via del Lavoro 1, 63846 Monte Giberto (FM) Phone: +39 0734 631669 - Fax +39 0734 631669 www.videx.it - info@videx.it	Notes: .	Autore: Marco Rongoni-L.S	
	Note: .	Cod.File: 4384-67h-004c.dwg	

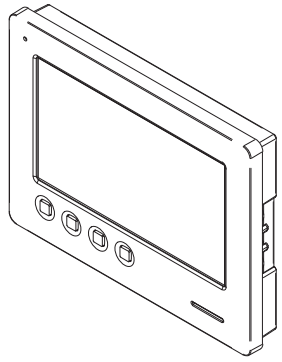

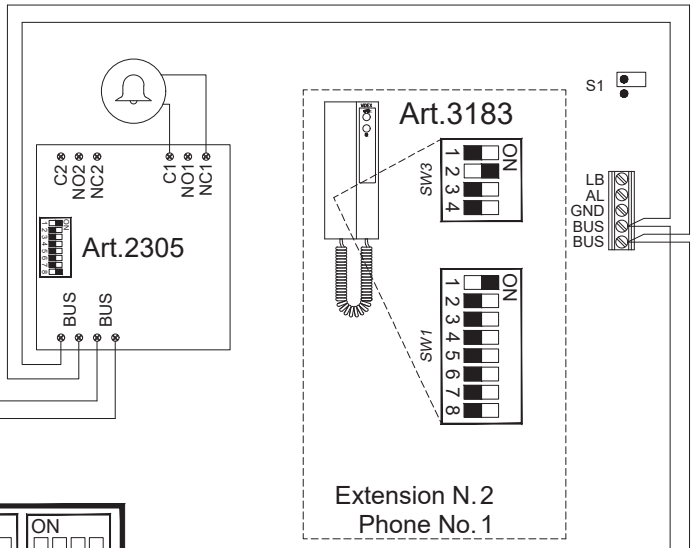

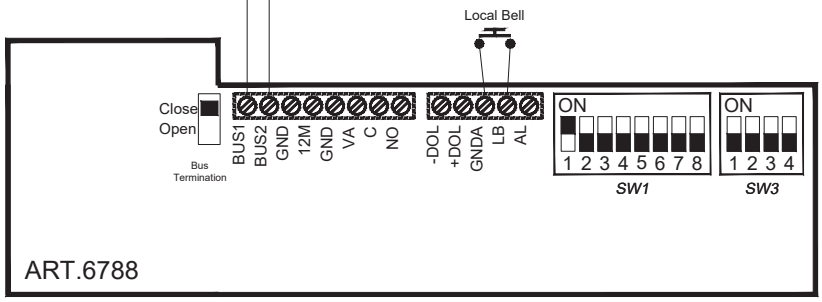

Extension N.1
Videophone:1

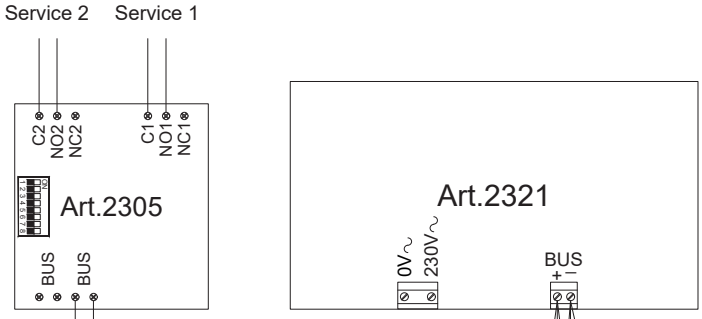

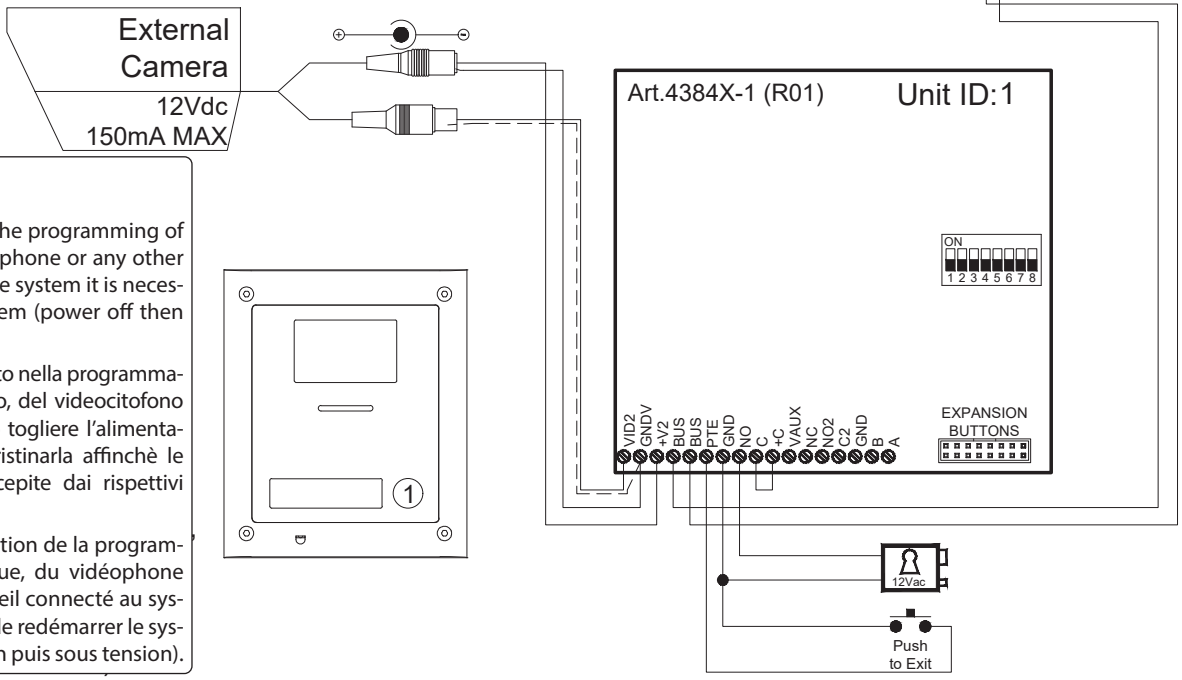

After each change on the programming of the door station, videophone or any other device connected to the system it is necessary to restart the system (power off then power on).

Dopo ogni cambiamento nella programmazione del posto esterno, del videocitofono o del relè, è necessario togliere l'alimentazione al sistema e ripristinarla affinchè le variazioni vengano recepite dai rispettivi dispositivi.

Après chaque modification de la programmation du poste de rue, du vidéophone ou de tout autre appareil connecté au système, il est nécessaire de redémarrer le système (mise hors tension puis sous tension).

Title: ESVK-1/6788, ESVK-1S/6788 One Way Videokit with additional intercom, relay to control an additional sounder, relay for two additional services and external camera	Data creazione: 11/05/2023	Foglio 1 / 1
Titolo: ESVK-1/6788, ESVK-1S/6788 Videokit Monofamiliare con citofono addizionale, relé per l'estensione della suoneria, relé per due servizi addizionali e telecamera esterna	Data modifica: 11/05/2023	
Videx Electronics S.p.A. Via del Lavoro 1, 63846 Monte Giberto (FM) Phone: +39 0734 631669 - Fax +39 0734 631669 www.videx.it - info@videx.it	Notes: .	Autore: Marco Rongoni-L.S
	Note: .	Cod.File: 4384-67h-005c.dwg

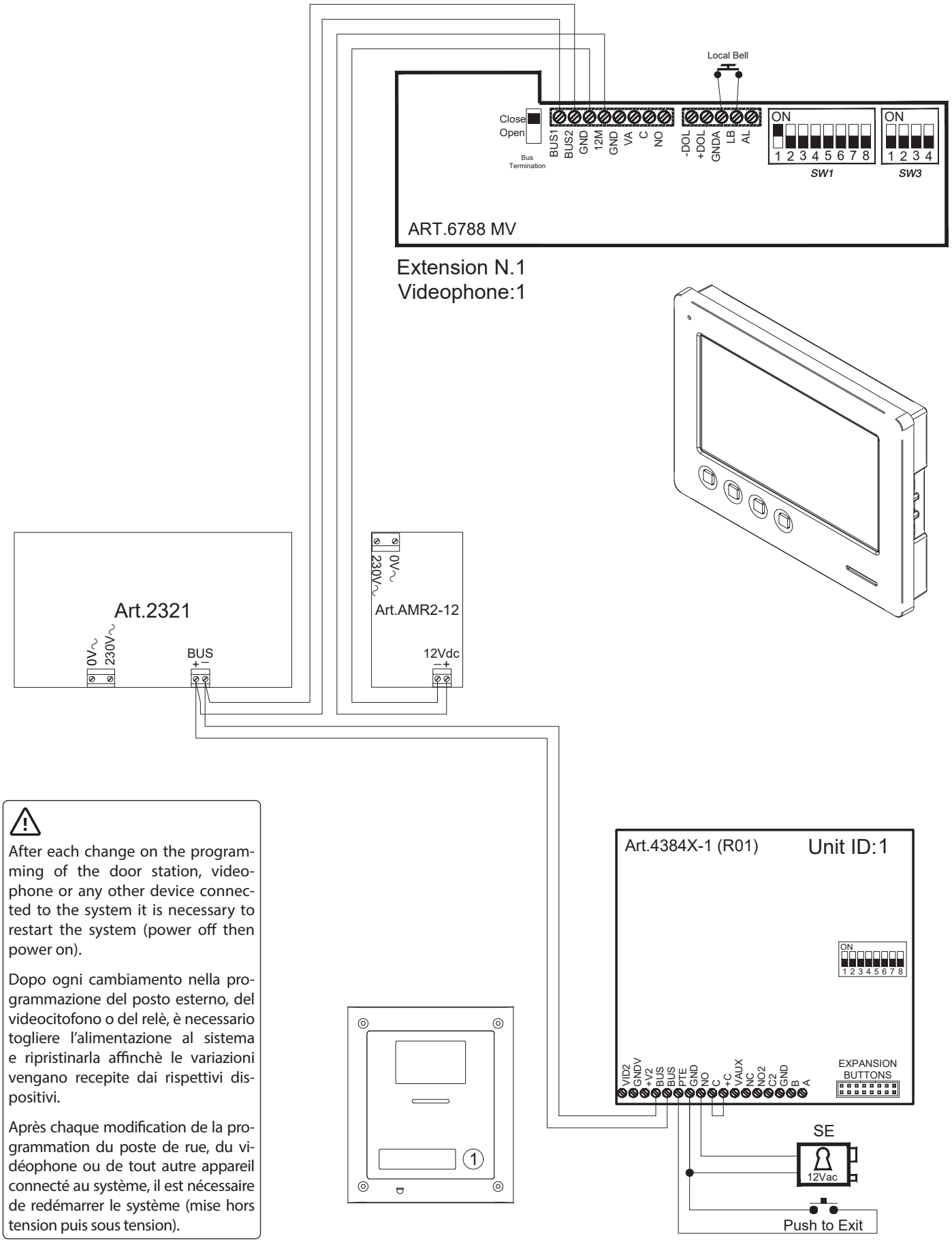

After each change on the programming of the door station, videophone or any other device connected to the system it is necessary to restart the system (power off then power on).

Dopo ogni cambiamento nella programmazione del posto esterno, del videocitofono o del relè, è necessario togliere l'alimentazione al sistema e ripristinarla affinchè le variazioni vengano recepite dai rispettivi dispositivi.

Après chaque modification de la programmation du poste de rue, du vidéophone ou de tout autre appareil connecté au système, il est nécessaire de redémarrer le système (mise hors tension puis sous tension).

Title: ESVK-1/6788, ESVK-1S/6788 One Way Videokit with video memory	Data creazione: 11/05/2023	Foglio 1 / 1
Titolo: ESVK-1/6788, ESVK-1S/6788 Videokit Monofamiliare con memoria video	Data modifica: 11/05/2023	
Videx Electronics S.p.A. Via del Lavoro 1, 63846 Monte Giberto (FM) Phone: +39 0734 631669 - Fax +39 0734 631669 www.videx.it - info@videx.it	Notes: . Note: .	Autore: Marco Rongoni-L.S Cod.File: 4384-67h-007c.dwg

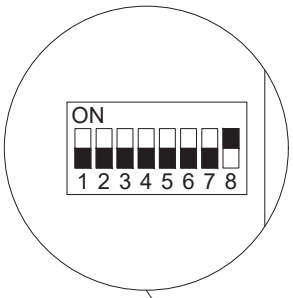

Enable advanced programming so to set the specific address for each button according to the system requirements.

Abilitare la modalità di programmazione avanzata per poter impostare gli indirizzi di ciascun pulsante secondo necessità.

Permettre une programmation avancée afin de définir l'adresse spécifique de chaque bouton en fonction des exigences du système.

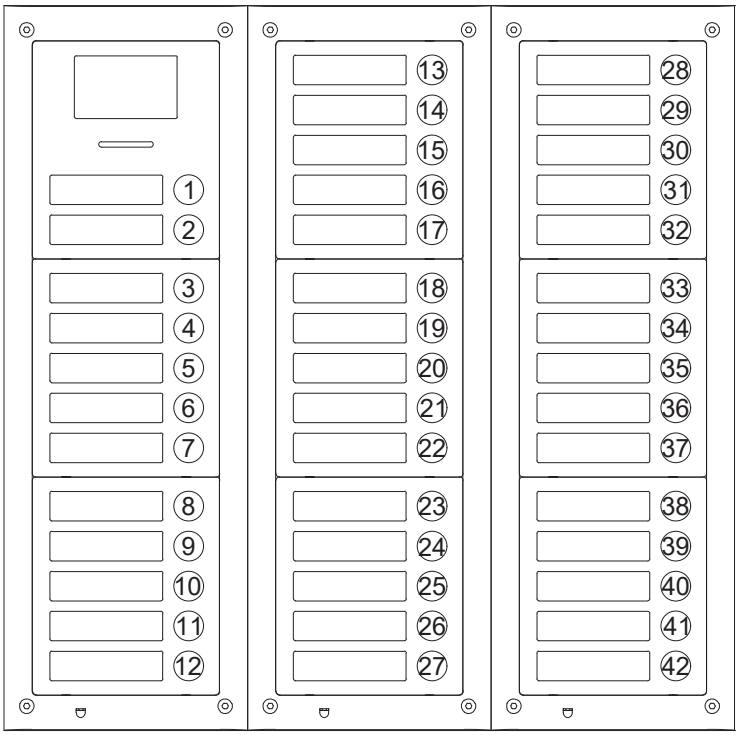

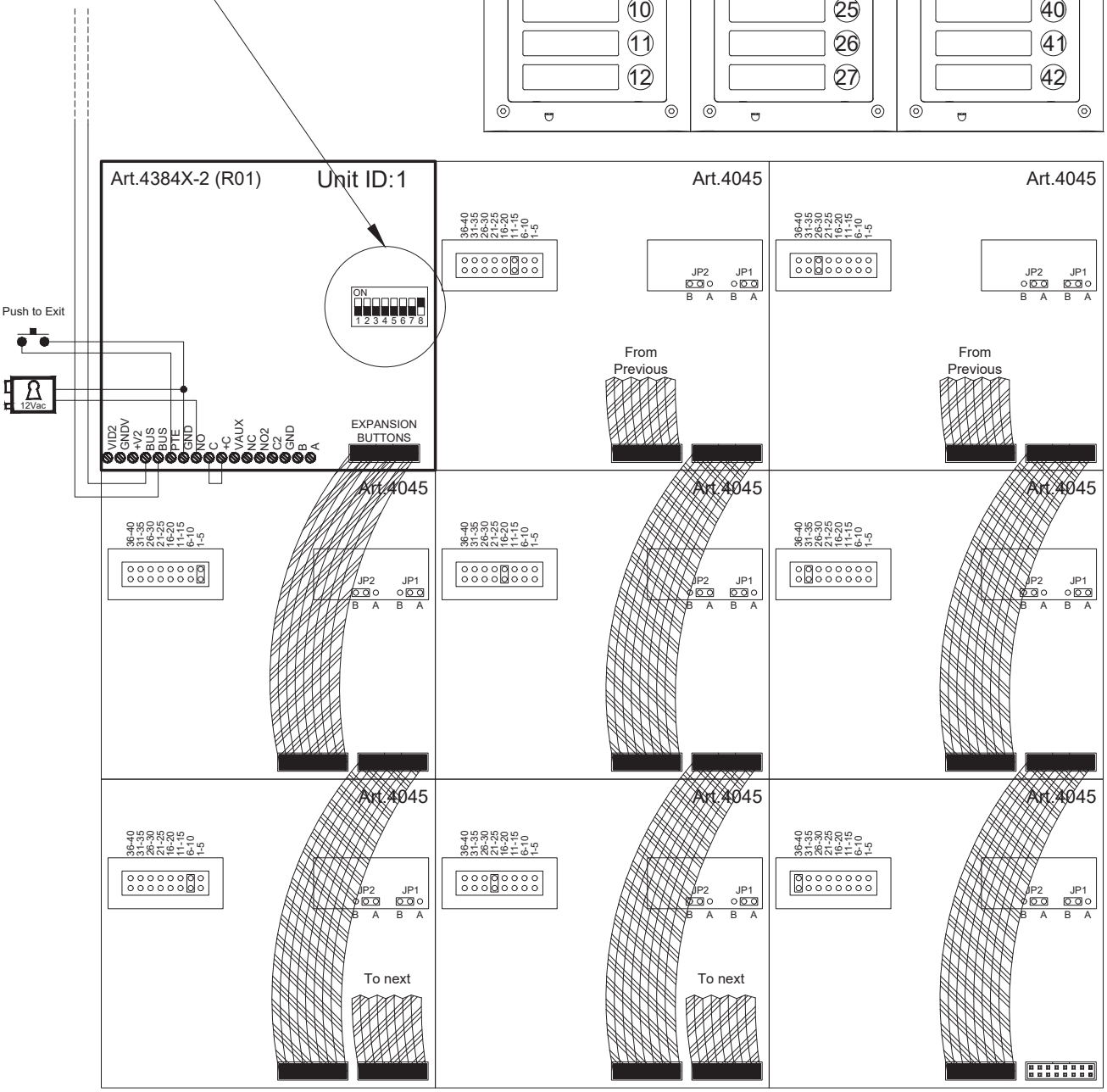

Title: ESVK videokit expanded up to 12 apartments system		Data creazione: 11/05/2023	Foglio 1 / 1
Titolo: Videokit ESVK con espansione fino a 12 appartamenti		Data modifica: 12/05/2023	
Videx Electronics S.p.A. Via del Lavoro 1, 63846 Monte Giberto (FM) Phone: +39 0734 631669 - Fax +39 0734 631669 www.videx.it - info@videx.it	Notes: -	Autore: Marco Rongoni-L.S	
	Note: .	Cod.File: 404xr01.dwg	

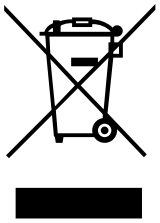

ENG **DISPOSAL**

In accordance with the Legislative Decree no. 49 of 14 March 2014 "Implementation of the Directive 2012/19/EU on waste electrical and electronic equipment (WEEE)".
The crossed-out bin symbol on the equipment or on the packaging indicates that when the product reaches the end of its lifetime, it must be collected separately from mixed municipal waste. The user must, therefore, dispose of the equipment at the end of its lifetime in the suitable waste collection centres or bring it to the retailer during the purchase of a new equipment of equivalent type at the ratio of one-to-one. Furthermore, the user is allowed to dispose of the WEEEs of very small size (domestic appliances without any external dimension exceeding 25 cm (9.84 inches) for free to the retailers, without any purchase obligation. The correct waste disposal of the WEEEs contributes to their reuse, recycling and recovery and avoids potential negative effects on the environment and human health due to the possible presence of dangerous substances within them.

ITA **SMALTIMENTO**

Ai sensi del Decreto Legislativo 14 marzo 2014, n° 49 "Attuazione della direttiva 2012/19/UE sui rifiuti di apparecchiature elettriche ed elettroniche (RAEE)".
Il simbolo del cassonetto barrato riportato sull'apparecchiatura o sulla sua confezione indica che il prodotto alla fine della propria vita utile deve essere raccolto separatamente dagli altri rifiuti urbani misti. L'utente dovrà, pertanto, conferire l'apparecchiatura giunta a fine vita presso gli idonei centri di raccolta differenziata oppure riconsegnarla al rivenditore al momento dell'acquisto di una nuova apparecchiatura di tipo equivalente, in ragione di uno a uno. L'utente ha, inoltre, la possibilità di conferire gratuitamente presso i distributori, senza alcun obbligo di acquisto, per i RAEE di piccolissime dimensioni (per le apparecchiature di tipo domestico con nessuna dimensione esterna superiore a 25 cm).
L'adeguata raccolta differenziata dei RAEE contribuisce al loro riutilizzo, riciclaggio e recupero ed evita potenziali effetti negativi sull'ambiente e sulla salute umana dovuti alla eventuale presenza di sostanze pericolose al loro interno.

FRA **ÉLIMINATION**

Conformément au décret législatif n ° 49 du 14 mars 2014 relatif à l' « Application de la directive 2012/19 / UE relative aux déchets d'équipements électriques et électroniques (DEEE) ».
Le symbole de la poubelle barrée sur l'équipement ou sur son emballage indique que le produit en fin de vie utile doit être collecté séparément des autres déchets municipaux en mélange. L'utilisateur doit donc remettre l'équipement en fin de vie aux centres de collecte appropriés ou le restituer au revendeur lors de l'achat d'un nouveau type d'équipement équivalent, dans le rapport de un à un. De plus, l'utilisateur a la possibilité de conférer gratuitement aux distributeurs, sans aucune obligation d'achat, de très petits DEEE (pour les appareils ménagers sans dimensions extérieures supérieures à 25 cm).
La collecte séparée adéquate des DEEE contribue à leur réutilisation, leur recyclage et leur valorisation et évite les éventuels effets négatifs sur l'environnement et la santé humaine en raison de la présence possible de substances dangereuses dans ceux-ci.

SPA **ELIMINACIÓN**

De conformidad con el Decreto legislativo n. 49 de 14 de marzo 2014 "Aplicación de la Directiva 2012/19/UE relativa a residuos de aparatos eléctricos y electrónicos (RAEE)".
El símbolo del contenedor tachado indicado sobre los aparatos o sobre los embalajes señala que el producto al final de su vida útil debe ser recogido separadamente de otros residuos municipales mezclados. Por tanto, el usuario deberà conferir los aparatos al final de su vida útil en los apropriados centros de recogida selectiva o devolverlos al revendedor al momento de la compra de nuevos aparatos equivalentes, en una relación de uno a uno. Además, el usuario tiene la posibilidad de entregar sin cargo a los distribuidores, sin ninguna obligación de compra, los RAEEs muy pequeños (para electrodomésticos sin dimensiones externas superiores a 25 cm).
La recogida selectiva apropriada de los RAEEs contribuye a su reutilización, reciclaje y valorización y evita potenciales impactos negativos sobre el medio ambiente y la salud humana debidos a la possible presencia de substancias peligrosas dentro de ellos.

NLD **VERWIJDERING**

In overeenstemming met het Wetsbesluit nr. 49 van 14 maart 2015 "Implementatie van de Richtlijn 2012/19/EU inzake afgedankte elektrische en elektronische apparaten (AEEA)".
Het doorgekruiste vuilnisbaksymbool op het apparaat of de verpakking geeft aan dat het product aan het einde van zijn levensduur niet samen met het gewone huisvuil weggegooid mag worden. De gebruiker moet het apparaat aan het einde van zijn levensduur inleveren bij een gepast inzamelpunt of de winkel waar hij een nieuw apparaat van een gelijksoortig type zal kopen. De gebruiker kan tevens AEEA's van een zeer klein formaat (huishoudapparaten met een buitenafmeting kleiner dan 25 cm (9,84 inch) gratis en zonder enige aankoopverplichting bij handelaars inleveren. Een juiste verwijdering van AEEA's draagt bij tot hergebruik, recycling en terugwinning, en voorkomt potentiële negatieve effecten op het milieu en de menselijke gezondheid door de mogelijke aanwezigheid van gevaarlijke stoffen.

POR **ELIMINAÇÃO**

De acordo com o Decreto Legislativo n.º 49 de 14 de março de 2014 "Implementação da Diretiva 2012/19/UE relativa aos resíduos de equipamentos elétricos e eletrónicos (REEE)".
O símbolo do caixote do lixo riscado no equipamento ou na embalagem indica que quando o produto atinge o fim da sua vida útil, deve ser recolhido separadamente dos resíduos urbanos mistos. O utilizador deve, portanto, eliminar o equipamento no final da sua vida útil nos centros de recolha de resíduos adequados ou levá-lo ao vendedor durante a compra de um novo equipamento de tipo equivalente, na proporção de um para um. Além disso, o utilizador pode eliminar gratuitamente os REEE de dimensões muito reduzidas aos vendedores, sem qualquer obrigação de compra.(só aparelhos domésticos sem qualquer dimensão externa que exceda 25 cm, ou seja 9,84 polegadas).
A correta eliminação dos REEE contribui para a sua reutilização, reciclagem e recuperação e evita potenciais efeitos negativos sobre o ambiente e a saúde humana devido à possível presença de substâncias perigosas no seu interior.

VIDEX®

Cert. N. IT05/1217

made in ITALY

MANUFACTURER **FABBRICANTE** **FABRICANT** **FABRICANTE** **FABRIKANT** **FABRICANTE** **الشركة المصنِّعة**	**VIDEX ELECTRONICS S.P.A.** Via del Lavoro, 1 63846 Monte Giberto (FM) Italy Tel (+39) 0734 631669 Fax (+39) 0734 632475 www.videx.it - info@videx.it	
CUSTOMER SUPPORT **SUPPORTO CLIENTI** **SUPPORTS CLIENTS** **ATENCIÓN AL CLIENTE** **KLANTENDIENST** **APOIO AO CLIENTE** **خدمة العملاء**	**VIDEX ELECTRONICS S.P.A.** www.videx.it technical@videx.it Tel: +39 0734-631669 Fax: +39 0734-632475	UK Customers only: **VIDEX SECURITY LTD** www.videxuk.com Tech Line: 0191 224 3174 tech@videxuk.com

Portugal office: **VX IBÉRIA, UNIPESSOAL LDA** Rua Tenente Mário Grilo, 26 D, E, F 4200-397 Porto Phone: (+351) 221 124 531 www.videx.it comercial@videx.it	*Singapore office:* **VIDEX ASIA PACIFIC PTE LTD** 31 Woodlands Close #06-37 Woodlands Horizon Singapore 737855 Phone: (+65) 81898912 commercial@videx.it
Main UK office: **VIDEX SECURITY LTD** 1 Osprey Trinity Park Trinity Way LONDON E4 8TD Phone: (+44) 0370 300 1240 www.videxuk.com marketing@videxuk.com	*Northern UK office:* **VIDEX SECURITY LTD** Unit 4-7 Chillingham Industrial Estate Chapman Street NEWCASTLE UPON TYNE - NE6 2XX Tech Line: (+44) 0191 224 3174 Phone: (+44) 0370 300 1240
Greece office: **VIDEX HELLAS Electronics** 48 Filolaou Str. 11633 ATHENS Phone: (+30) 210 7521028 (+30) 210 7521998 Fax: (+30) 210 7560712 www.videx.gr videx@videx.gr	*Danish office:* **VIDEX DANMARK** Hammershusgade 15 DK-2100 COPENHAGEN Phone: (+45) 39 29 80 00 Fax: (+45) 39 27 77 75 www.videx.dk videx@videx.dk
Benelux office: **NESTOR COMPANY NV** E3 laan, 93 B-9800 Deinze Phone: (+32) 9 380 40 20 Fax: (+32) 9 380 40 25 www.nestorcompany.be info@nestorcompany.be	*Dutch office:* **NESTOR COMPANY BV** Business Center Twente (BCT) Grotestraat, 64 NL-7622 GM Borne www.nestorcompany.be info@nestorcompany.be

CE UK CA

The product is CE marked demonstrating its conformity and is for distribution within all member states of the EU with no restrictions. This product follows the provisions of the European Directives 2014/30/EU (EMC); 2014/35/EU (LVD); 2011/65/EU (RoHS): CE marking 93/68/EEC.

Le produit est marqué CE à preuve de sa conformité et peut être distribué librement à l'intérieur des pays membres de l'union européenne EU.
Ce produit est conforme aux directives européennes 2014/30/EU (EMC) ; 2014/35/EU (LVD) ; 2011/65/EU (RoHS): marquage CE 93/68/EEC.

Het product heeft de CE-markering om de conformiteit ervan aan te tonen en is bestemd voor distributie binnen de lidstaten van de EU zonder beperkingen. Dit product volgt de bepalingen van de Europese Richtlijnen 2014/30/EU (EMC); 2014/35/EU (LVD); 2011/65/EU (RoHS): CE-markering 93/68/EEG.

يحمل المنتَج علامة التوافق الأوروبِّي CE لإظهار توافقه مع المواصفات ذات الصِلة وإمكانية توزيعه في كافَّة دول الاتِّحاد الأوروبِّي بدون أيَّة قيود. يلبِّي هذا المنتَج جميع متطلَّبات التوجيهات الأوروبِّية EU (EMC/٣٠/٢٠١٤); EU (LVD/٣٥/٢٠١٤); EU/٦٥/٢٠١١ ـ (RoHS): علامة المطابقة للمواصفات الأوروبِّية CE EEC/٦٨/٩٣.

Il prodotto è marchiato CE a dimostrazione della sua conformità e può essere distribuito liberamente all'interno dei paesi membri dell'Unione Europea UE.
Questo prodotto è conforme alle direttive Europee: 2014/30/UE (EMC); 2014/35/UE (LVD); 2011/65/UE (RoHS): marcatura CE 93/68/EEC.

El producto lleva la marca CE que demuestra su conformidad y puede ser distribuido en todos los estados miembros de la unión europea UE.
Este producto cumple con las Directivas Europeas 2014/30/EU (EMC); 2014/35/EU (LVD); 2011/65/EU (RoHS): marca CE 93/68/EEC.

O produto tem a marca CE que demonstra a sua conformidade e destina-se a distribuição em todos os estados membros da UE, sem restrições. Este produto segue as disposições das Diretivas Europeias 2014/30/UE (EMC); 2014/35/UE (LVD); 2011/65/UE (RoHS): marcação CE 93/68/CEE.

665500029-EN